GLOBAL

WF 1515 (-AUT) / WF 1515-AE / WF1515-LG-B

Instruction & Parts manual

www.globalsew.com

info@globalsew.com

Table of Contents

Partsbook

1. Frame & miscellaneous cover components . . . . . 14～15
2. Upper shaft, lower shaft driving & balance components . . . . . 16～17
3. Needle bar rocking components . . . . . 18～19
4. Pressure adjusting & upper feed mechanism components(1) . . . . . 20～21
5. Pressure adjusting & upper feed mechanism components(2) . . . . . 22～23
6. Feed mechanism components . . . . . 24～25
7. Hook shaft & lower shaft components . . . . . 26～27
8. Thread cutting components . . . . . 28～29
9. Automatic back components 30
10. Thread release components 31
11. Thread tension components 32
12. Lower thread winder mechanism components 33
13. Automatic presser lifting mechanism components 34
14. Air mechanism components 35
15. Lubrication components . . . . . 36～37
16. Hook components . . . . . 38～39
17. Belt cover & oil reservoir components 40
18. DL mechanism (option) components 41
19. Thread stand components 42
20. Optional parts (additional spring for presserbar) components 43
21. Suspension square (option) components 44
22. Accessories parts components 45
23. Sewing gauges 1515 & 1515-AUT . . . . . 46～47
24. Special parts 1515-AE . . . . . 48～50
25. Special parts 1515-LG B . . . . . 51～52

SERVICE MANUAL

1. Machine introduction

This machine adopts synchronous feeding and unique fabric feeding mechanism to optimize its climbing performance, and features powerful and smooth thick-fabric feeding, even stitches, tidy and nice-looking. Lines are drawn by horizontal-type hook, taken up by slide bar mechanism and driven by synchronous belts on upper and lower shafts, which has ensured high speed and low noise performance.

This product is widely applied in sewing thick materials such as automobile cushion, sofa, purse and tent etc.

2. Main technical specification

Application	Thick fabric
Maximum sewing speed	2500s.p.m
Longest stitch	9mm
Needle bar travel	36mm
Needle	DP×17(Nm125~Nm180)Standard Nm180(24#)
Ways of lubrication	Oiling for oil line (automatic oiling for hook)
Hook	Automatic large vertical lubrication hook
Height of pressure foot	Manual control: 9mm, knee control : 16mm
Power of the motor	370W (specially for sewing machine motor)

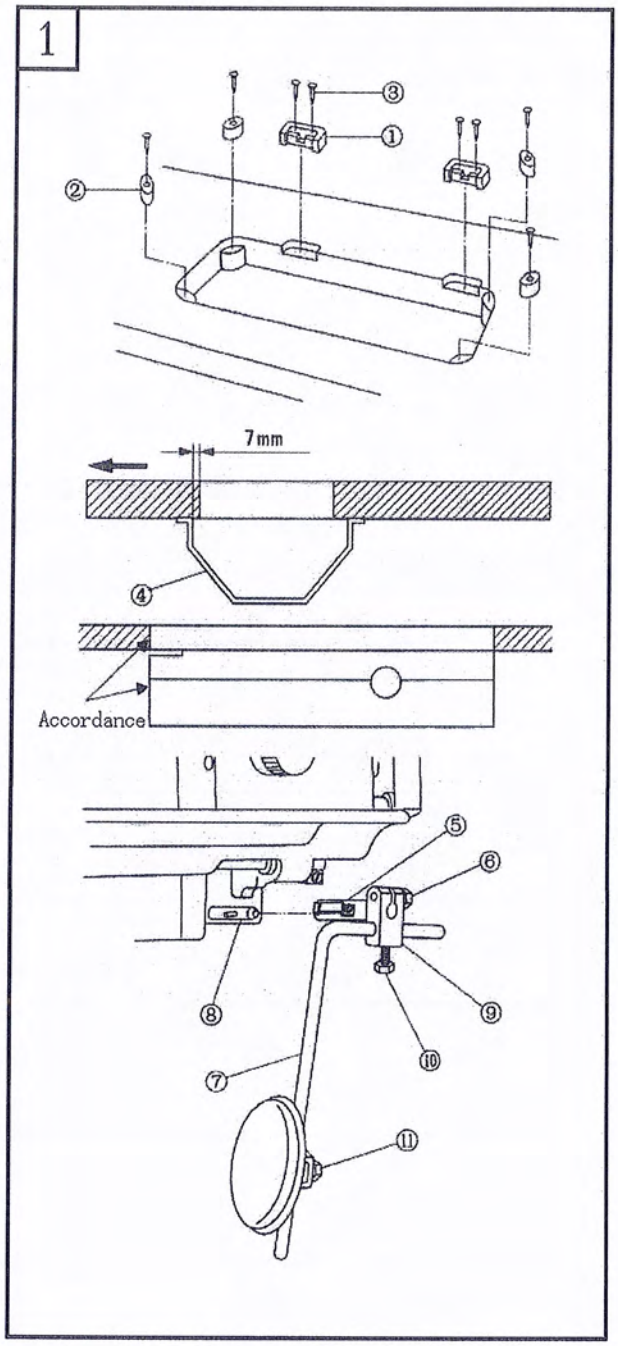

3. Installation (See Figure 1)

1. Installation of the frame bedplate connection hook block and the frame rubber cushion:

Fix the auxiliary connection hook block① and the frame rubber cushion② on the bedplate with nails③.

2. Fix the oil tray④ on the bedplate with eight screw nails according to the position indicated on the figure.

3. Install the kneel-controlled joint⑤, kneel-controlled lifting installation crank ⑨ and curved bar⑦ according to the direction of the kneel-controlled lifting bar shaft⑧.

4. Adjust the direction of cushion blocks with fixed screws ⑥ and ⑩ and ⑪ .

4. Installation of waste oil container (See Figure 2)

1. Install the oil discharge stopper①, oil seal② and the washer③ on the oil tray. Cover the cushion block⑤ and the washer⑧ on the fixed screw④. Then fix them with nut⑥.
2. Turn the waste oil pot⑦ to the oil discharge stopper① after fixing.

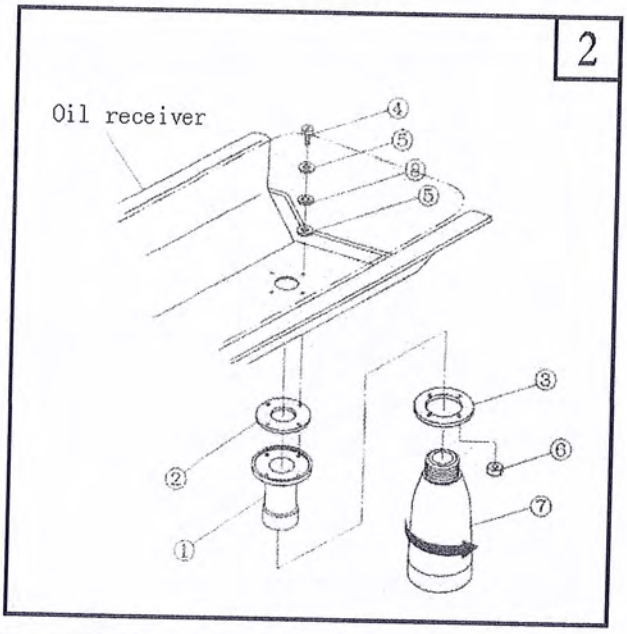

5. Adjusting the belt tension (See Figure 3)

Move the height of the motor when adjusting the belt tension. Press the middle part of the belt with force of 9.8N. The relaxation shall be 15mm at the moment.

Note: Before adjusting, please cut off the power and ensure that the motor has stopped.

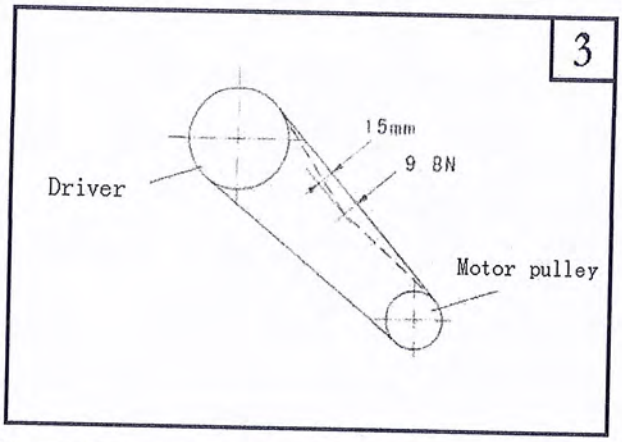

6. Installation of belt cover (See Figure 4)

1. Screw the belt cover support⑦ to the bolt hole on the head.
2. Install the belt cover (right) ① on the head with fixed screws ② and ⑧.
3. Mount the belt cover (left) ③ on the claw AB of belt cover (right) ①.
4. Fix the belt cover (left) ③ with fixed screws ④, ⑤ and ⑥.

Note: Please confirm that the belt cover doesn't contact with the belt and the driving wheel after installing the belt cover.

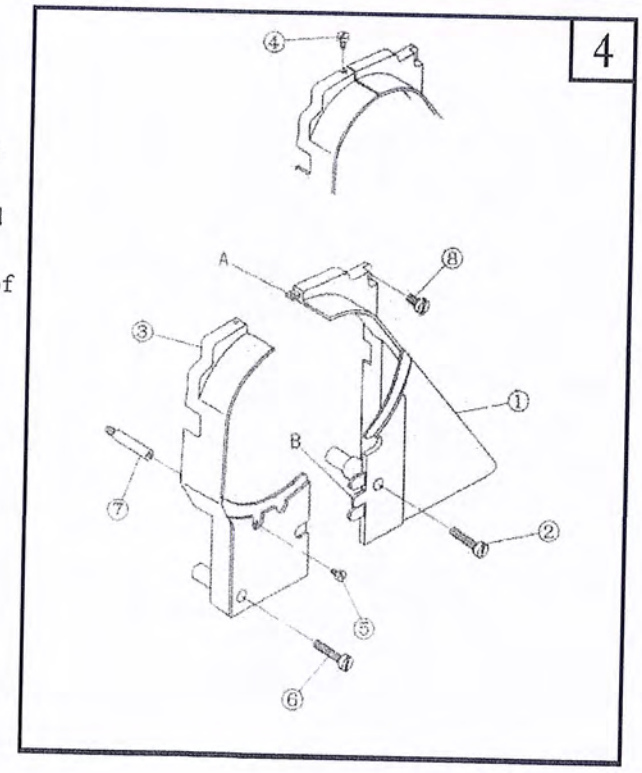

5

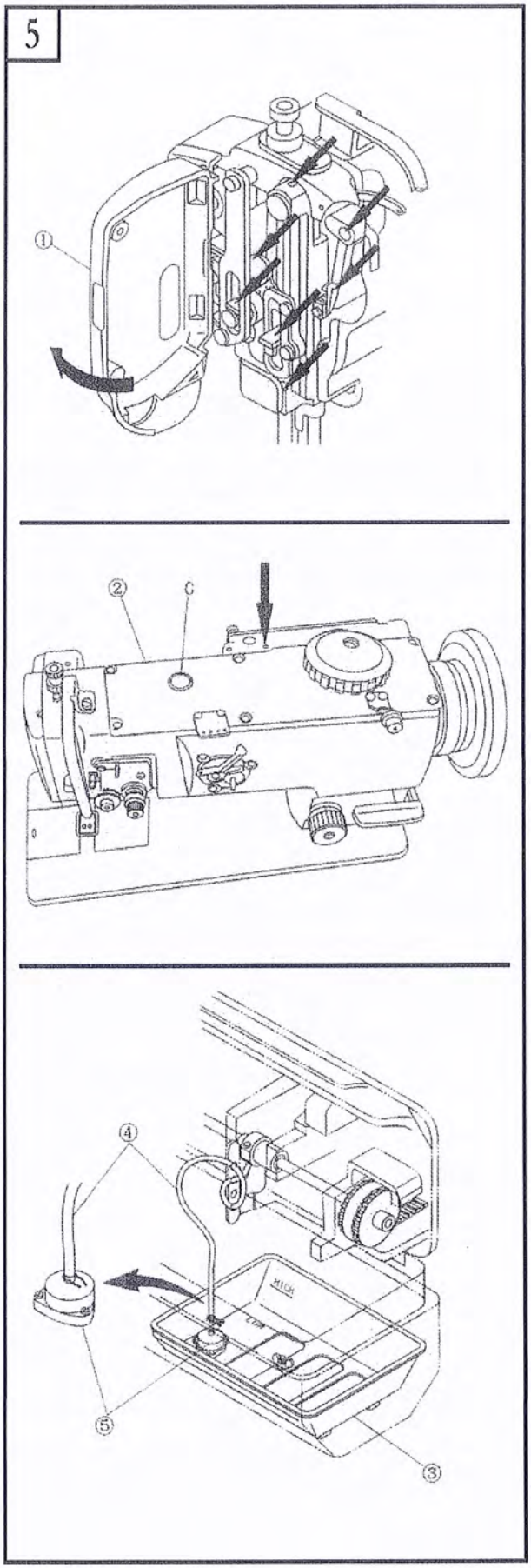

7. Oiling (See Figure 5)

ONE. Oiling of surface

1. Screw off the panel bolts.
2. Open the panel ① to the direction of arrow.
3. Properly oil the part indicated by the arrow in every day.
4. Close the panel.
5. Tighten the bolts.

TWO. Machine oiling

1. Add a proper amount of oil to the parts indicated by the arrow in every day.
2. Before the first operation or when the machine has not been in use for a long time, add oil to the parts indicated by the arrow, and dismantle head cover ② to add a proper amount of oil to each felt and oil line.

THREE. Oil slot oiling

1. Insert the bulge at the bottom of the oil slot③ into the waste oil hole which is used for receiving oil.
2. Connect the oil pipe④ with the filter⑤ of the oil slot. Then fix it with clamp.
3. Add sewing machine oil into the oil slot till the HICH position.
4. Oil if the level is under LOW.
5. Run the sewing machine after oiling. You can see the oil moving up and down in oil window C in normal condition. (with the revolution more than 1500rpm)

8. Cleaning the oil slot (See Figure 6)

1. Dismantle the oil tube on the oil slot.
2. Remove the butterfly nut① and take down the cover (upper) ②, filter③ and cover (lower) ④ to clean.
3. Take down the fixed screw⑤ of the filter box and clean the filtering core⑥ and magnet⑦ inside it.
4. When changing the engine oil inside the oil slot, dismantle the stop bolt⑧ and then the waste oil can be discharged into the waste oil container. Tighten the stop bolt⑧ after discharging. (Note: Discharge the engine oil before taking out the oil slot.)
5. Put the filtering core⑥ and magnet⑦ into the filter box and fix them with fixed screw ⑤ on the cover (upper)②.
6. Put with the order of cover (lower)④, filter③ and cover (upper)② and them fix them on the oil slot with butterfly screw①.
7. Insert the oil tube into the oil slot and fix with clamp.
8. Loosen the nut⑩ when adjusting the oil quantity of the hook with adjusting screw⑨. When loosening the nut clockwise, the oil quantity decreases; otherwise, it increases.
9. Put the paper near the periphery of the hook for about five seconds. It is proper for the oil quantity if there is oil stain on the paper as shown in the figure.

6

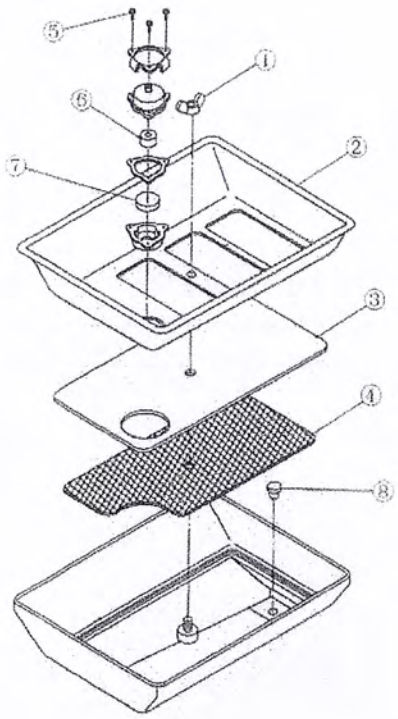

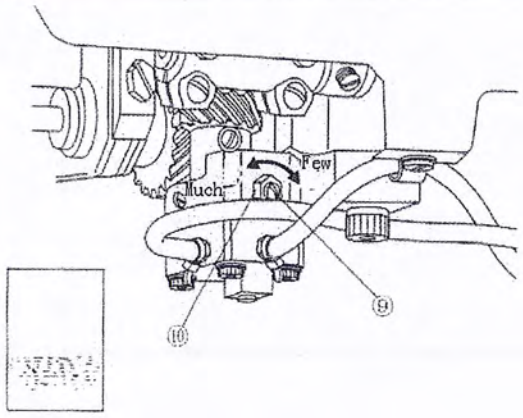

Scrap of paper

7

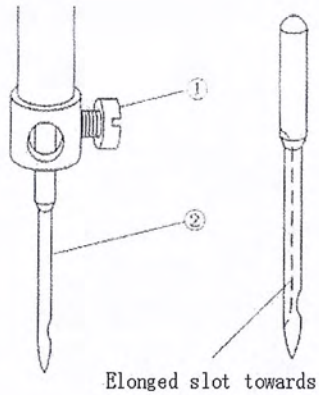

Elonged slot towards the left

9. Installation of needle (See Figure 7)

1. Run the driving wheel and lift the needle bar to the highest position.
2. Loosen the needle fixed bolt② to make the long slot of the needle① face the left.
3. Insert the needle into the innermost part.
4. Tighten the needle fixed bolt②.

8

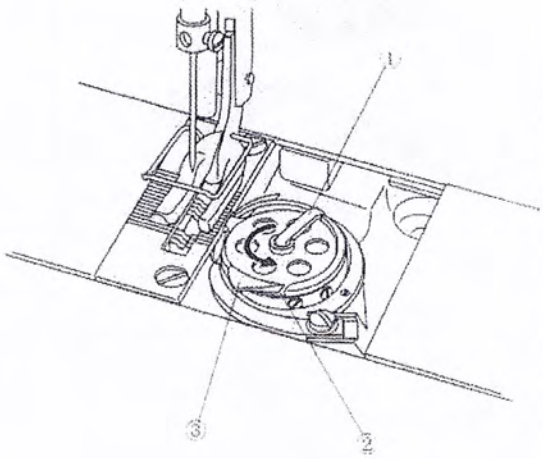

10. Threading of the bottom thread (See Figure 8)

1. Cock the washer① of the hook and draw the core out.
2. During installation, correctly insert the hook shaft and lay down the washer.
3. Inlay the thread into the threading slot ② of the hook. Get past from the underside of the bulge③ and get into the thread tension spring.
4. The hook core shall turn along the arrow after pulling the bottom thread.

9

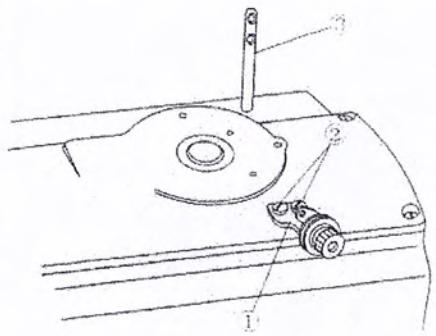

11. Installation of thread winder guide (See Figure 9)

1. Install the thread winder guide① on the cover with fixed screw②.
2. Insert the bottom thread guide bar③ into the stand.

12. Winding the bottom thread (See Figure 10)

1. Thread according to the order of ①~④ and then wind the coil on the hook core.
2. Press down the winding bar A.
3. Loosen the fixed screw B and adjust the regulating panel to make the thread wind to the position of about 80%.
4. If the winding thread deviates from the course, move the thread winder guide C forward and backward to adjust and then fix with fixed screw D.
5. After the winding is over, the winding rod separates and stops automatically.

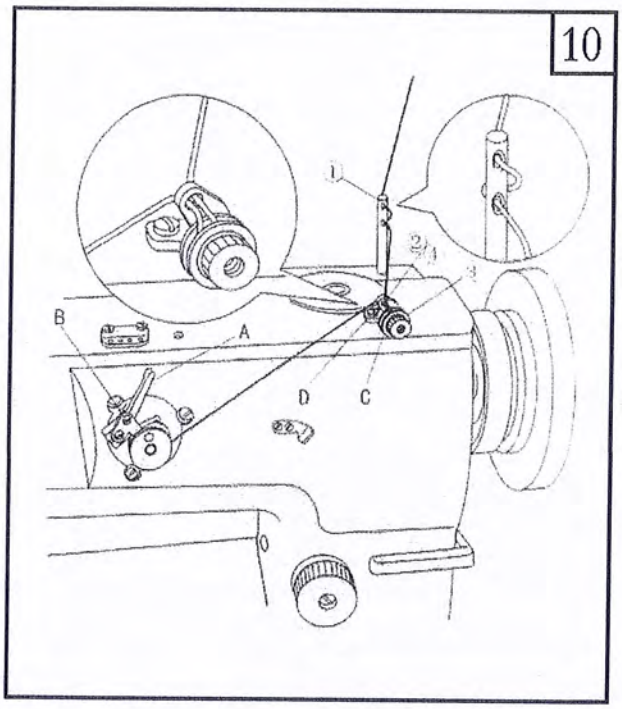

13. Threading (See Figure 11)

Thread according to the order indicated on the figure.

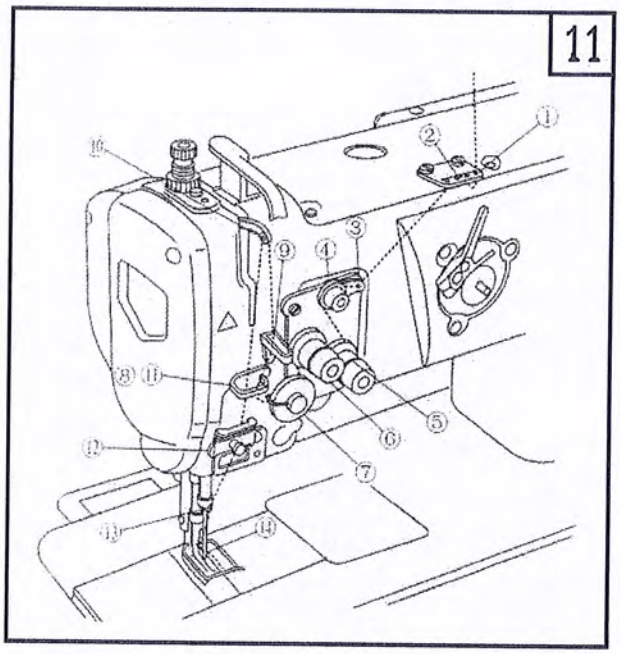

14. Adjusting the length of stitches (See Figure 12)

Turn the feed adjusting tray① to the left (or right) and make the adjusting mark aim at the required number.

Press the backstitch spanner② downward to start and release the spanner to resume the normal stitch.

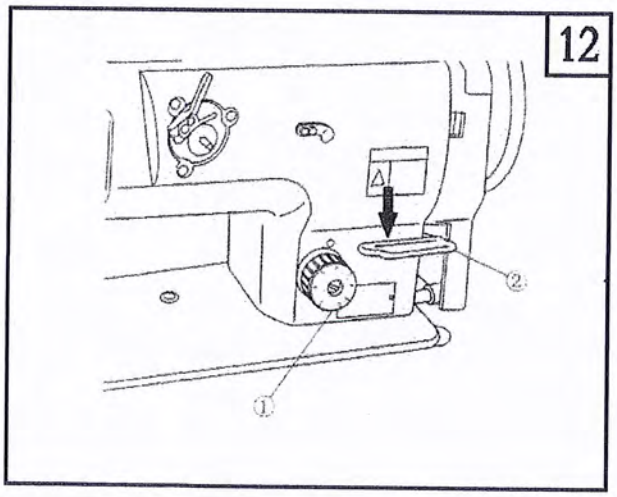

13

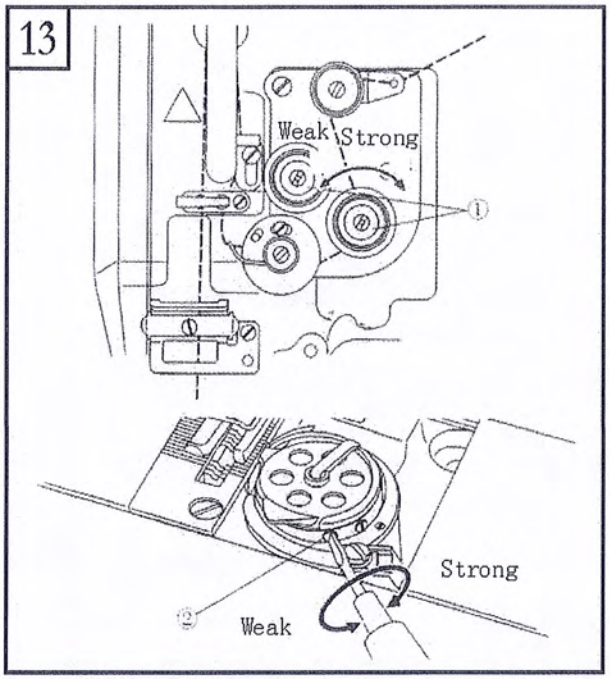

15. Adjusting the thread tension (Figure 13)

1. Adjusting the tension of feeding thread
   Turn the thread tension nut① clockwise, than the tension of feeding thread increases; otherwise, the tension decreases.
2. Adjusting the tension of bottom thread
   Turn the thread tension screw① clockwise, than the tension of bottom thread increases; otherwise, the tension decreases.

14

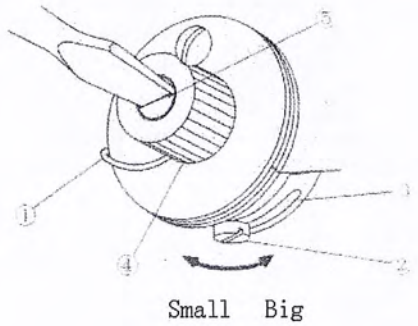

16. Adjusting the take-up spring (See Figure 14)

1. When changing the movement amount of the take-up spring
   a. Loosen the fixed screw② of the stopper and move the stopper③ to the left or right in order to adjust the take-up spring①.
   b. The movement amount of the take-up spring increases if moving the stopper to the right; otherwise it decreases.
2. When changing the strength of the take-up spring
   Loosen the nut④. Then turn the spring shaft⑤ anticlockwise, the strength increases; otherwise, it decreases.

17. Lifting the pressure foot (See Figure 15)

1. When stopping the pressure foot in the rise position, uplift the pressure foot lifting bar① of presser spanner to the arrow position. Stop after the pressure foot rises 9mm.
2. Put down the presser spanner when lowering the pressure foot. It will be back to the original position.

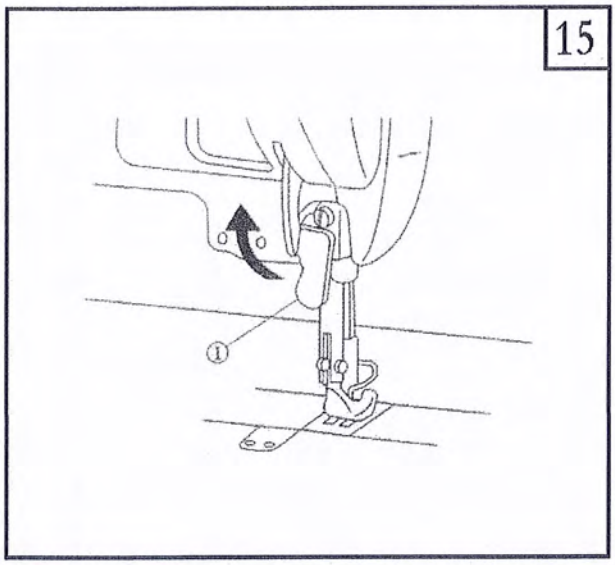

18. Adjusting the pressure of the pressure foot (See Figure 16)

Move the pressure foot adjusting screw① to the right, than the pressure increases; otherwise, it decreases. Tighten the fixed nut② after adjusting.

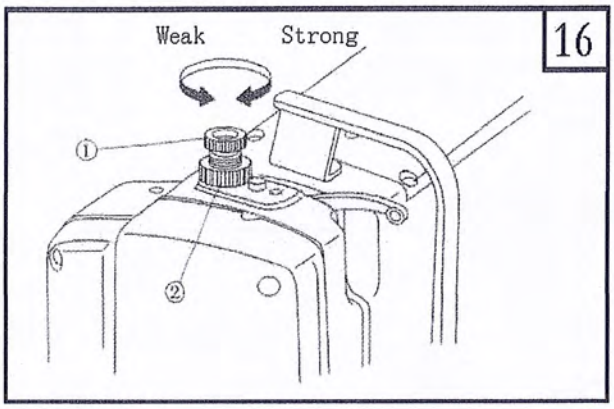

19. Adjusting the hook needle bed (See Figure 17)

Please confirm the position of the needle bed after changing the hook. When it is in standard position, the hook needle bed② is about 0.1~0.2mm away from the side of the needle. If it is incorrect, please curve the hook needle bed for adjusting.
1. When curving the hook needle bed inwards, insert the screwdriver into the outside of the hook needle bed.
2. When curving the hook needle bed outwards, insert the screwdriver into the inside of the hook needle bed.

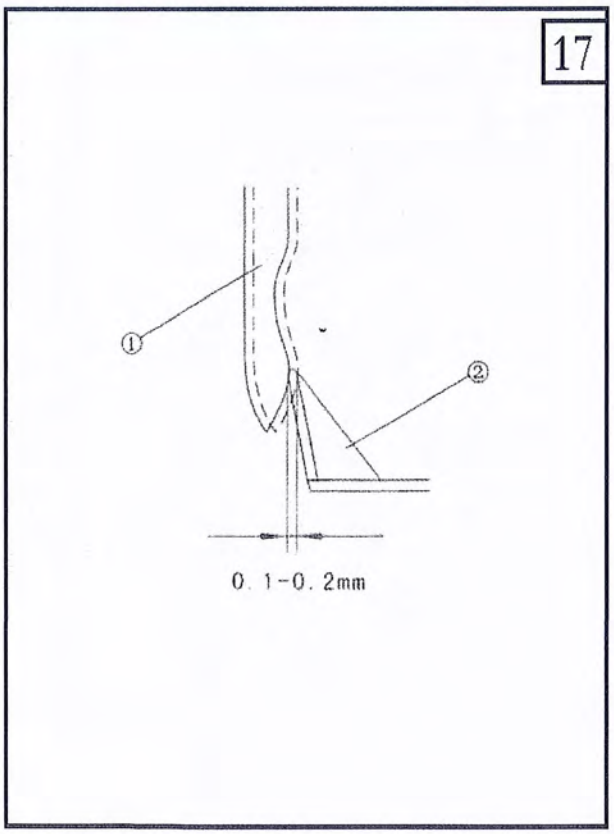

18

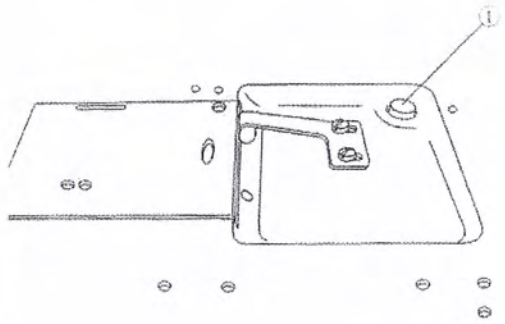

20. Resetting of the safety device
(See Figure 18)

During the sewing, the safety device starts if exerting over-force on the hook. The hook of driving wheel fails to work at the moment. Please eliminate the failures prior to resetting after the safety device starts.

1. Press the button① on the head and reverse the driving wheel with force.
2. Resetting is finished after you hear the sound of crack.

Note: Run the driving wheel with hands to confirm whether the button① is reset.

19

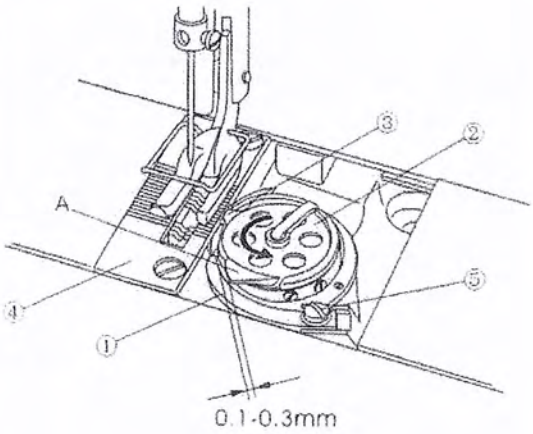

21. Adjusting the length of stitches
(See Figure 19)

1. Turn the driving wheel to the normal direction and transfer the middle hook guide① to the final position.
2. Turn ② to the arrow and make the middle hook stopper③ to the slot of the needle ④.
3. Loosen the fixed screw⑤ of the middle guide. Adjust the clearance between the middle hook guide and the bulge A of the hook cover to 0.1~0.3mm.

22. Relations between the needle and the hook (See Figure 20)

1. Turn the adjusting knob of needle distance to 0.
2. Turn the driving wheel. After the lowest point of the needle bar rises to 2.3mm, loosen the needle bar joint screw①. Adjust the distance from the upper part of the needle hole of needle② to the hook top③ to 1.5mm and then tighten.
3. Turn the driving wheel. Rise the needle bar to 2.3mm from the lowest point. Adjust the centers of the hook top③ and the needle② to make them basically the same. Then tighten the fixed screws④ of two screw gears (smaller ones). Aim the first screw with V-shape front of the two fixed screws④ at the V-shape slot of the hook shaft. Then tighten and fix.
4. At the position where the centers of both the hook top③ and the needle② are basically the same, loosen the fixed screw ⑥ of hook shaft pillow and then move it to the left or right in order to adjust the clearance between the hook top and the needle to 0.05~0.1mm. Then tighten the fixed screw⑥.
5. Loosen the fixed screw⑤ of two screw gears (bigger ones). Move the screw gear (bigger one) to the left or right to make the centers of the hook top③ and the needle② basically the same. Tighten the fixed screw⑤. Aim the first screw of two fixed screws⑤ at the flat part of the lower shaft and then tighten.

20

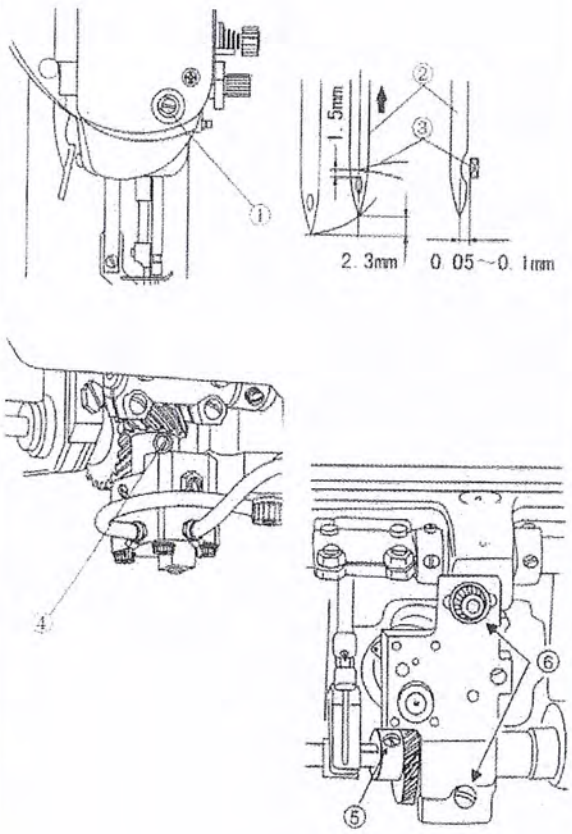

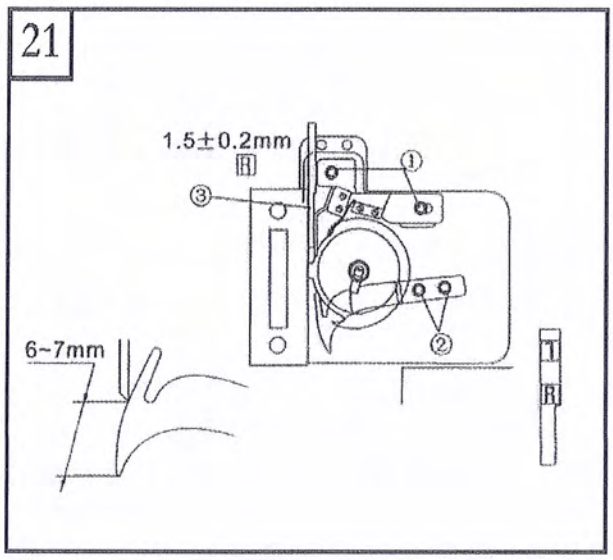

23 Adjusting the cutter (See Figure 21)

Adjusting the position of fixed cutter:

Loosen the fixed screw① of fixed cutter holder with the right and left sides of the fixed cutter front end respectively 1.5±0.2mm and 2±0.2mm away from the needle bed front end. The front and back of the cutter holder are up against the stairs of the shaft pillow and tighten the fixed screw①. Please use the face R of fixed cutter scale③ attached to determine the distance.

Adjust the pressure of cutter:

Loosen the fixed screw② of the moveable cutter. Turn the upper wheel and shift the moveable cutter to adjust its pressure. If the distance from the front end of moveable cutter to the front end of fixed cutter is 6~7mm, the cutter pressure is standard.

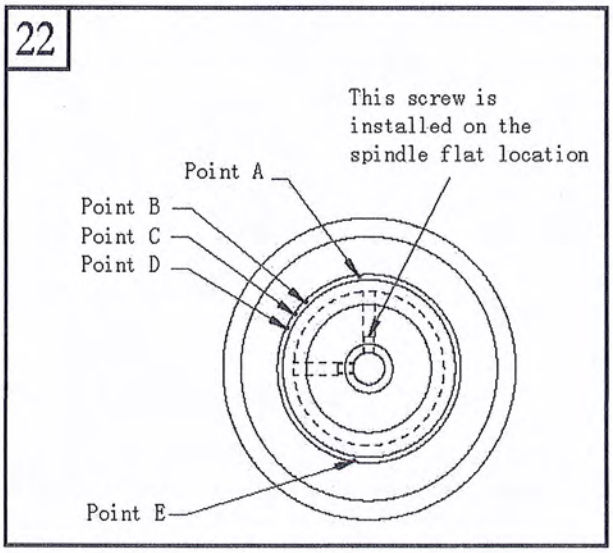

24. Hand wheel points picture (See Figure 22)

All mentioned hand wheel points (A-E) are subjected to the picture on the left.

25. Suspension position confirmation for the machine (See Figure 23)

When the points on the hand wheel are same as those on the cover, please adjust the every suspension position as follow.

Hand wheel point	Position of the machine
Point B-C	Position of upper stop needle
Point E	Position of lower stop needle
Point A	Thread cutting CAM adjustment
Point A	Reverse the position of lifting needle

23

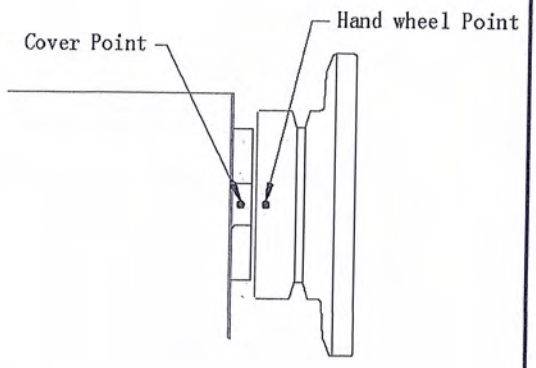

26. Adjustment of thread cutting CAM position (See Figure 24)

1. Make sure the point A on the hand wheel is also on the corresponding position of the cover.
2. Prepare one gauge stick F with 3mm diameter and 70mm length.
3. Please put the gauge stick F into the hole 1 of the parts, and be directed at the thread cutting CAM setting points.
4. Please fix the thread cutting CAM screw, then put out the measurement stick F.

24

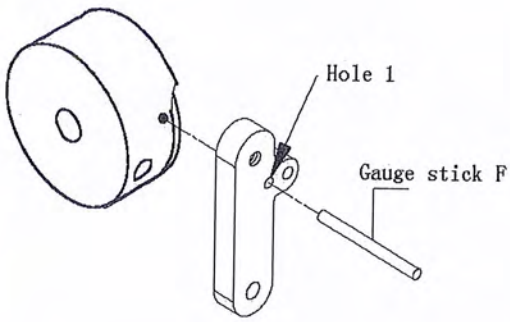

21

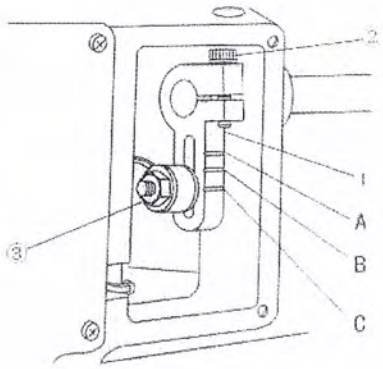

About up-and-down alternation amount	
Scale A	About 5mm
Scale B	About 4mm
Scale C	About 3mm

27. Adjusting the alternation amount of the pressure foot (See Figure 21)

As for the alternative rise amount of the press foot, it is generally adjusted within the long hole of the upper feed crank① when increasing the alternative rise amount. If decreasing the alternative rise amount, adjusting downward and then tighten the nut③.

If the rise amount for the bigger pressure foot and the smaller one differs, move the undersurface of both the bigger pressure foot and the smaller one to the position on the needle bed. Then loosen the fixed screw② of the crank to turn the driving wheel to the front. Tighten the screw②. The rise amount of the bigger pressure foot is more than that of the smaller one. Reverse the driving wheel then the rise amount of the smaller pressure foot is more than that of the bigger one.

Dismantle the right side of the window panel; then you can see the upper feed crank①.

28. List of sewing speed

Up-and-down alternation amount	Stitch: less than 6mm	Stitch: 6mm~9mm
Less than 3mm	2,500rpm	2,000rpm
3mm~4mm	2,000rpm	2,000rpm
4mm~6.5mm	1,600rpm	1,600rpm

Set the maximum revolution according to different conditions. Please don't exceed the set value.

29. Sewing problems and troubleshooting

Problems	Causes	Troubleshooting
1. Broken stitching (feeding thread residue of 2~3mm on the back of the fabric)	①Scars on the thread, needle top, hook top and the fixed slot on the hook inner circle of the needle bed. ②Strong upper tension. ③The needle touches the hook top. ④The oil is insufficient in the hook. ⑤Weak feeding thread tension. ⑥Powerful take-up spring and small transfer amount. ⑦Over fast or over slow synchronization of the needle and the hook.	○Polish the scars on the hook top with fine sand paper. File the inner circle fixing slot of the hook of the needle bed. ○Reduce the feeding thread tension. ○Refer to the content in 19. Relations between the Needle and the Hook. ○ Adjust the oil quantity (Refer to the content in 7. Oiling.) ○Increase the feeding thread tension. ○Weaken the take-up spring and increase the movement amount. ○Refer to the content in 19. Relations between the Needle and the Hook.
2. Skipped stitching	①Over fast or over slow synchronization of the needle and the hook. ②Weak pressure for the pressure foot. ③Incorrect clearance between the upper part of the needle hole and the hook top. ④Wrong needle type.	○Refer to the content in 19. Relations between the Needle and the Hook. ○Tighten the adjusting screw of the pressure foot. ○Refer to the content in 19. Relations between the Needle and the Hook. ○Change to a little bit bigger needle.
3. poor stringing	①Not threading under the thread tension spring of the hook cover. ②Poor processing of the thread. ③The hook core doesn' t slide. ④Weak bottom thread tension. ⑤Strong bottom thread winding. ⑥Damaged needle top.	○Refer to the content in 9. Threading of the Bottom Thread. ○Polish with fine sand paper or file. ○Change the hook core or hook. ○Increase the bottom thread tension. ○Decrease the bottom thread winding tension. ○Change the needle.

PARTSBOOK

1. Frame & miscellaneous cover components

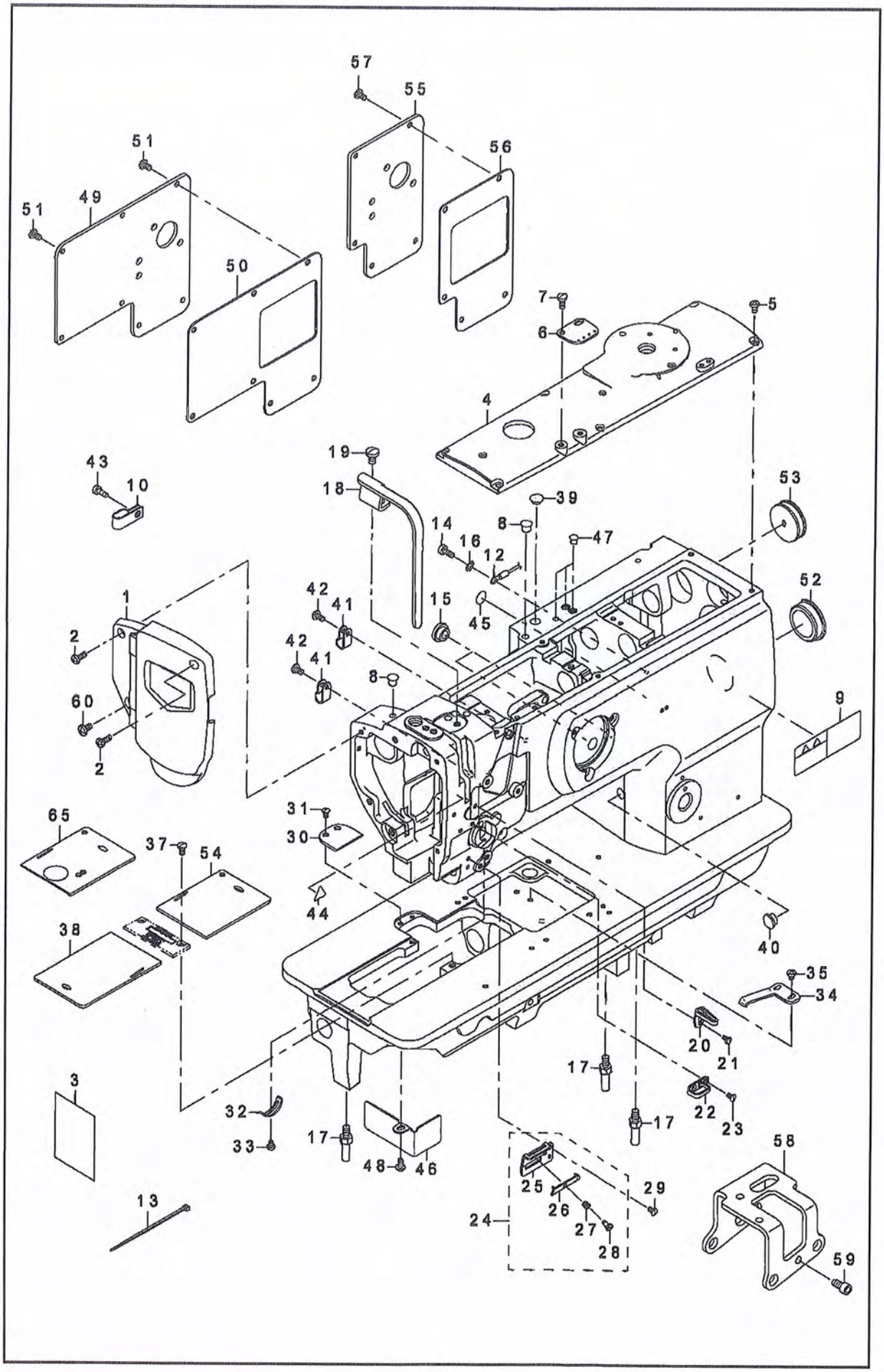

1. Frame & miscellaneous cover components

		DESCRIPTION	
1	40016798	FACE PLATE ASM.	1
2	SS4111215SP	SCREW 11/64-40 L=12	2
3	40019114	LUBRICATION SUPPLEMENT	1
4	21331301	TOP COVER B	1
5	SS4110815SP	SCREW 11/64-40 L=8	6
6	21355904	ARM THREAD GUIDE	1
7	SS7621040SP	SCREW 3/16-32 L=9.5	2
8	TA0750704R0	RUBBER PLUG	2
9	CM301300001	SAFETY LABEL	1
10	D2112555B00	CORD HOLDER LARGE	1
11			
12	22951552	GROUND WIRE ASM.	1
13	EA9500B0100	CABLE BAND	1
14	SS6111140SP	SCREW 11/64-40 L=11	1
15	TA1250504R0	RUBBER PLUG	2
16	WT0530002KS	TOOTHED WASHER D=5.3	1
17	22602601	BED SCREW STUD	3
18	21331608	BALANCE COVER	1
19	SS7150910TP	SCREW 15/64-28 L=9	1
20	21355805	THREAD GUIDE	1
21	SS5090610SP	SCREW 9/64-40 L=6	1
22	B1129051000	FRAME THREAD GUIDE UPPER	1
23	SS2090710TP	SCREW 9/64-40 L=7.2	2
24	21408554	THREAD GUIDE ASM.	1
25	21408505	THREAD GUIDE PLATE	<1>
26	17912106	NEEDLE THREAD PRESSER PLATE	<1>
27	B1132521000	THREAD PRESSER PLATE SPRING	<1>
28	SD0380551SL	HINGE SCREW D=3.80 H=5.5	<1>
29	SS2090710TP	SCREW 9/64-40 L=7.2	1
30	22651202	AUXILIARY COVER	1
31	SS2090710TP	SCREW 9/64-40 L=7.2	2
32	B3138512000	TAKE-UP SPRING ADJUSTING PLATE	1
33	SS7090520TP	SCREW 9/64-40 L=4.5	1
34	B1111563000	BED SLIDE SPRING	1
35	SS4110515SP	SCREW 11/64-40 L=5	2
36			
37	SS2110920TP	SCREW 11/64-40 L=8.5	2
38	21349600	SLIDING PLATE (LEFT)	1
39	TA1250504R0	RUBBER PLUG	1
40	TA1050504R0	RUBBER PLUG	1
41	HX00123000A	CABLE CLIP	2
42	SS4110815SP	SCREW 11/64-40 L=8	2
43	SS6111140SP	SCREW 11/64-40 L=11	1
44	CM300200001	ATTENTION SEAL	1
45	22901805	GROUND MARK	1
46	21332200	OIL SHIELD (LEFT)	1
47	TA0550604R0	RUBBER PLUG	3
48	SS4110815SP	SCREW 11/64-40 L=8	1
49	21331905	WINDOW PLATE C	1
50	21332101	WINDOW PLATE PACKING C	1
51	SS4110815SP	SCREW 11/64-40 L=8	7
52	22619100	CAP	1
53	10201200	RUBBER PLUG	1
54	21349808	THREAD CUTTING SLIDING PLATE	1
55	21348909	WIDOW PLATE D	1
56	21332002	WINDOW PLATE PACKING B	1
57	SS4110815SP	SCREW 11/64-40 L=8	5
58	21343207	KNEE LIFTER SHAFT BASIS	1
59	SM6061202TP	SCREW M6 L=12	3
60	SS4150915SP	SCREW 15/64-28 L=9	1

2. Upper shaft, lower shaft driving & balance components

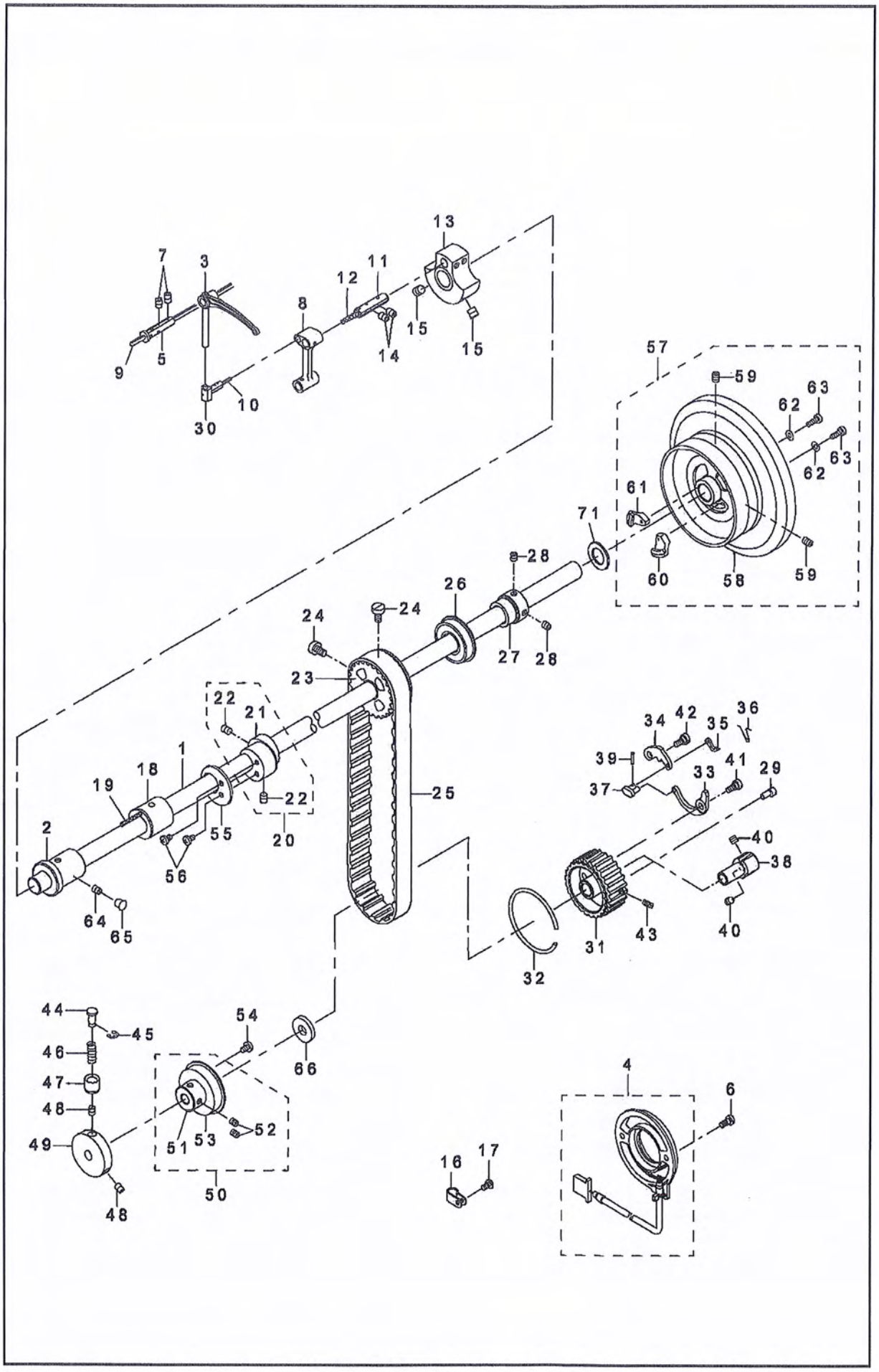

2. Upper shaft, lower shaft driving & balance components

		DESCRIPTION	
1	21332705	UPPER SHAFT	1
2	21333000	UPPER SHAFT FRONT METAL	1
3	21333208	BALANCE	1
4	40024855	CONTAIN SYNCHRO ASM.	1
5	B1906051000	TAKE-UP LEVER PIN	1
6	10604809	SCREW	2
7	SS8150822TP	SCREW 15/64-28 L=8	2
8	21339106	NEEDLE BAR CRANK ROD	1
9	CQ303000000	OIL WICK	0.45
10	CQ202000000	OIL WICK	0.03
11	B1210051000	NEEDLE BAR CRANK PIN	1
12	CQ505000000	OIL WICK	0.03
13	21332507	COUNTER WEIGHT (A) (36MM)	1
14	SS8150822TP	SCREW 15/64-28 L=8	2
15	SM8080812TP	SCREW M8X8	2
16	HX00123000A	CABLE CLIP	1
17	SS4110815SP	SCREW 11/64-40 L=8	1
18	21333109	UPPER SHAFT INNER METAL	1
19	CQ202000000	OIL WICK	0.15
20	21336557	ECCENTRIC CAM A ASM.	1
21	21336508	ECCENTRIC CAM A	<1>
22	SS8660810TP	SCREW 1/4-40 L=8	<2>
23	40038692	UPPER SPROCKET	1
24	SS6661110SP	SCREW 1/4-40 L=11	2
25	22604300	TIMING BELT	1
26	B1203512000	BUSHING REAR	1
27	21402300	UPPER SHAFT BEARING HOOK	1
28	SM8060602TP	SCREW M6X6	2
29	21387907	ADJUSTING PIN (1.2)	1
30	21333307	BALANCE SLIDE SHAFT	1
31	21387501	LOWER SPROCKET	1
32	B1214019000	SPROCKET RING	1
33	21387709	SAFETY CLUTCH SPRING	1
34	21387600	SAFETY CLUTCH HOOK	1
35	B1308055000	SAFETY CLUTCH COUNTER-HOOK	1
36	B1309055000	COUNTER-HOOK SPRING	1
37	B1310055000	SAFETY CLUTCH SMALL LINK	1
38	21387808	SAFETY BASE	1
39	B1314055000	SAFETY CLUTCH SMALL LINK PIN	1
40	SS8660612TP	SCREW 1/4-40 L=6	2
41	SD0640322TP	HINGE SCREW D=6.35 H=3.2	1
42	SD0640322TP	HINGE SCREW D=6.35 H=3.2	1
43	SS8111010TP	SCREW 11/64-40 L=9.5	1
44	21333802	SAFETY CLUTCH PUSH BUTTON	1
45	RE0500000K0	E-RING 5	1
46	B1639051000	SPRING	1
47	B1313055000	SAFETY CLUTCH KNOB SLEEVE	1
48	SS8660530TP	SCREW 1/4-40 L=4.5	2
49	21333901	SAFETY CLUTCH DISC	1
50	40038700	THRUST COLLAR ASM.	1
51	40038702	THRUST COLLAR	<1>
52	SS8661030SP	SCREW 1/4-40 L=10	<2>
53	SB120000200	BEARING 20X42	<1>
54	SS7120760SP	SCREW 3/16-28 L=7.0	2
55	21353008	HORIZONTAL FEED CAM COVER	1
56	SS7110710SP	SCREW 11/64-40 L=7	2
57	21427059	FLYWHEEL	1
58	21427000	FLYWHEEL	<1>
59	SS8150822TP	SCREW 15/64-28 L=8	<2>
60	M40071100AA	MAGNET FITTING BASE A ASM.	<1>
61	M40071100AB	MAGNET FITTING BASE B ASM.	<1>
62	WP0450801SD	WASHER 4.5X10X0.8	<2>
63	SS6111210SP	SCREW 11/64-40 L=12	<2>
64	SS8150710TP	SCREW 15/64-28 L=7	1
65	TA0750704R0	RUBBER PLUG	1
66	40016148	THRUST COLLAR B WASHER	1
67			
68			
69			
70			
71	22606206	SPACER Y	1

3. Needle bar rocking components

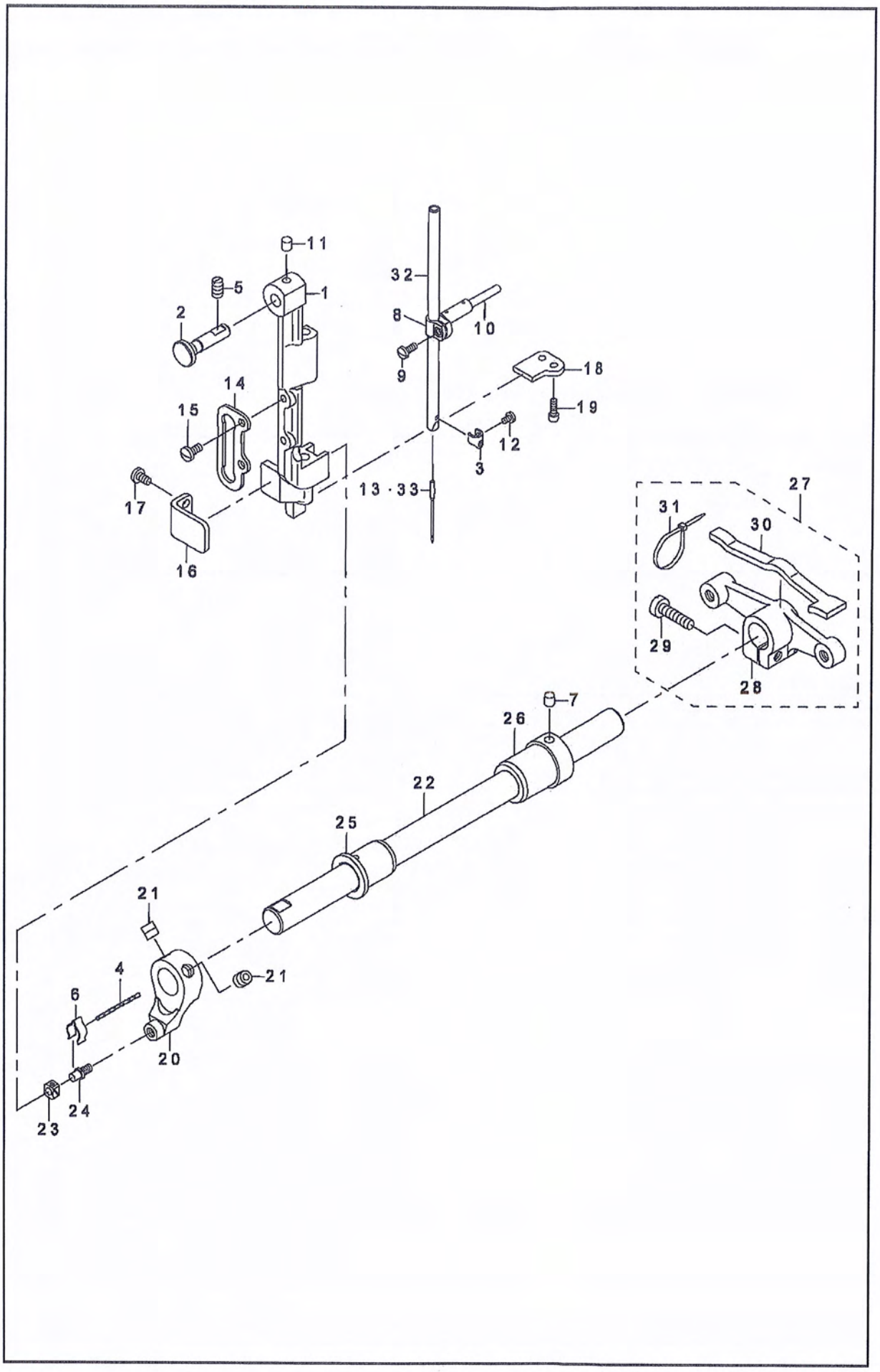

3. Needle bar rocking components

		DESCRIPTION	
1	B1420563000	NEEDLE BAR FRAME	1
2	21405204	HINGE STUD	1
3	21338504	NEEDLE BAR THREAD RACK	1
4	CQ202000000	OIL WICK	0.05
5	SS8151150TP	SCREW 15/64-28 L=10.5	1
6	B1437051000	OIL WICK RETAINER	1
7	21387402	FELT	1
8	B1411053000	NEEDLE BAR CONNECTION	1
9	SS7090910SP	SCREW 9/64-40 L=8.5	1
10	B1412051000	FELT	1
11	22814909	FELT	1
12	SS7080510TP	SCREW 1/8-44 L=4.5	1
13	M13517B1600	NEEDLE 135X17 #160	1
14	B1467563000	UPPER FEED BAR GUIDE	1
15	SS7110910TP	SCREW 11/64-40 L=8.5	2
16	21388400	ROCKING BASE GUIDE	1
17	SS7110830SP	SCREW 11/64-40 L=7.5	2
18	21338603	ROCKING BASE GUIDE (B)	1
19	SS6091022TP	SCREW	2
20	21338801	ROCKING FRONT ARM	1
21	SM8080802TP	SCREW	2
22	21338900	ROCKING SHAFT	1
23	B1414232000	SQUARE BLOCK	1
24	B1410771000	STUD	1
25	21339304	ROCKING SHAFT FRONT METAL	1
26	40027746	BUSHING REAR	1
27	21339056	ROCKING REAR ARM ASM.	1
28	21339007	ROCKING REAR ARM	<1>
29	SS6152440SP	SCREW 15/64-28 L=23.5	<1>
30	21347406	ROCKING REAR ARM FELT	<1>
31	EA9500B0100	CABLE BAND	<2>
32	21338405	NEEDLE BAR THREAD RACK	1
33	M13517B1200	NEEDLE 135X17 #120	1

4. Pressure adjusting & upper feed mechanism components(1)

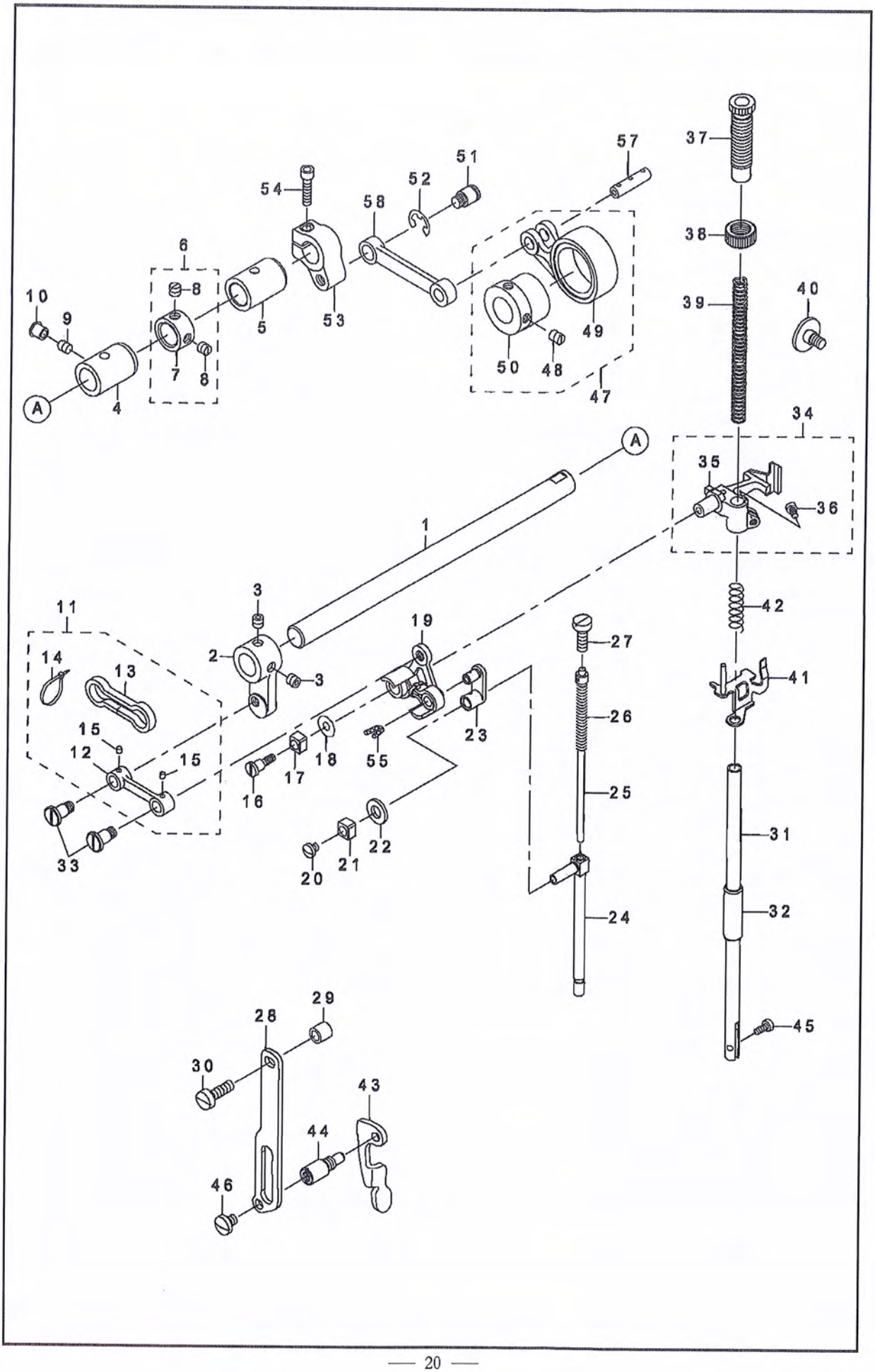

4. Pressure adjusting & upper feed mechanism components(1)

		DESCRIPTION	
1	21340401	UPPER FEED SHAFT	1
2	21340500	UPPER FEED FRONT ARM	1
3	SS8660612TP	SCREW 1/4-40 L=6	2
4	40039326	FRONT METAL	1
5	21378302	FEED ROCK SHAFT METAL	1
6	22904155	MAIN SHAFT THRUST COLLAR ASM.	1
7	22904106	MAIN SHAFT THRUST COLLAR	<1>
8	SS8660610TP	SCREW 1/4-40 L=6	<2>
9	SS8150710TP	SCREW 15/64-28 L=7	1
10	TA0750704R0	RUBBER PLUG	1
11	40033027	UPPER FEED LINK ASM.	1
12	40033026	UPPER FEED LINK	<1>
13	21347109	FELT	<1>
14	EA9500B0000	CLIP CV-70S	<2>
15	CQ3000000F0	OIL FELT	<0.003>
16	40018339	SCREW	1
17	B1414555000	SLIDE BLOCK	1
18	WP0501046SC	WASHER 5 X 13 X 1	1
19	40033029	TRIANGULAR LEVER ASM.	1
20	SS7110510SP	SCREW 11/64-40 L=5	1
21	B1414555000	SLIDE BLOCK	1
22	10509701	FELT	1
23	40018341	WALKING BAR DRIVING LINK	1
24	40033030	WALKING BAR A	1
25	B14670530A0	WALKING BAR ASM.	1
26	B1468053000	WALKING BAR SPRING	1
27	SS6151780SP	SCREW 15/64-28 L=17.0	1
28	21406509	UPPER FEED GUIDE PLATE	1
29	26225201	ROLLER	1
30	SS6151920SP	SCREW 15/64-28 L=19.0	1
31	B1501241H00	PRESSER BAR	1
32	B1510155000	PRESSER BAR LOWER BUSHING	1
33	40018340	SCREW	2
34	40033032	PRESSER BAR HOLDER A ASM.	1
35	40033031	PRESSER BAR HOLDER A	<1>
36	SS7110910TP	SCREW 11/64-40 L=8.5	<1>
37	21340906	PRESSER ADJUSTING SCREW	1
38	22907604	PRESSER SPRING REGULATOR NUT	1
39	B1502246000	PRESSER SPRING	1
40	SD0800481SP	HINGE SCREW D=8 H=4.9	1
41	21341151	THREAD RELEASE HOLDING PLATE	1
42	B1462053000	THREAD RELEASE SPRING	1
43	21406103	PRESSER LIFTER LEVER	1
44	21406608	GUIDE PLATE SPACER	1
45	SS6090910TP	SCREW 9/64-40 L=9	1
46	SS7150740SP	SCREW 15/64-28 L=7	1
47	40075553	ECCENTRIC ROD(SET)	1
48	SS8660810TP	SCREW 1/4-40 L=8	<2>
49	10713758	UPPER FEED CAM ROD ASM.	<1>
50	10713600	UPPER FEED CUM	<1>
51	21048707	HINGE SCREW	1
52	RE0800000K0	E-SHAPED SNAP RING (8MM)	1
53	21340302	UPPER FEED REAR ARM (B)	1
54	SM6052002TP	SCREW M5 L=20	1
55	CQ252000000	OIL WICK	0.02
56			
57	10713808	CONNECTION LINK PIN B	1
58	21340005	UPPER FEED LINK (B)	1

5. Pressure adjusting & upper feed mechanism components(2)

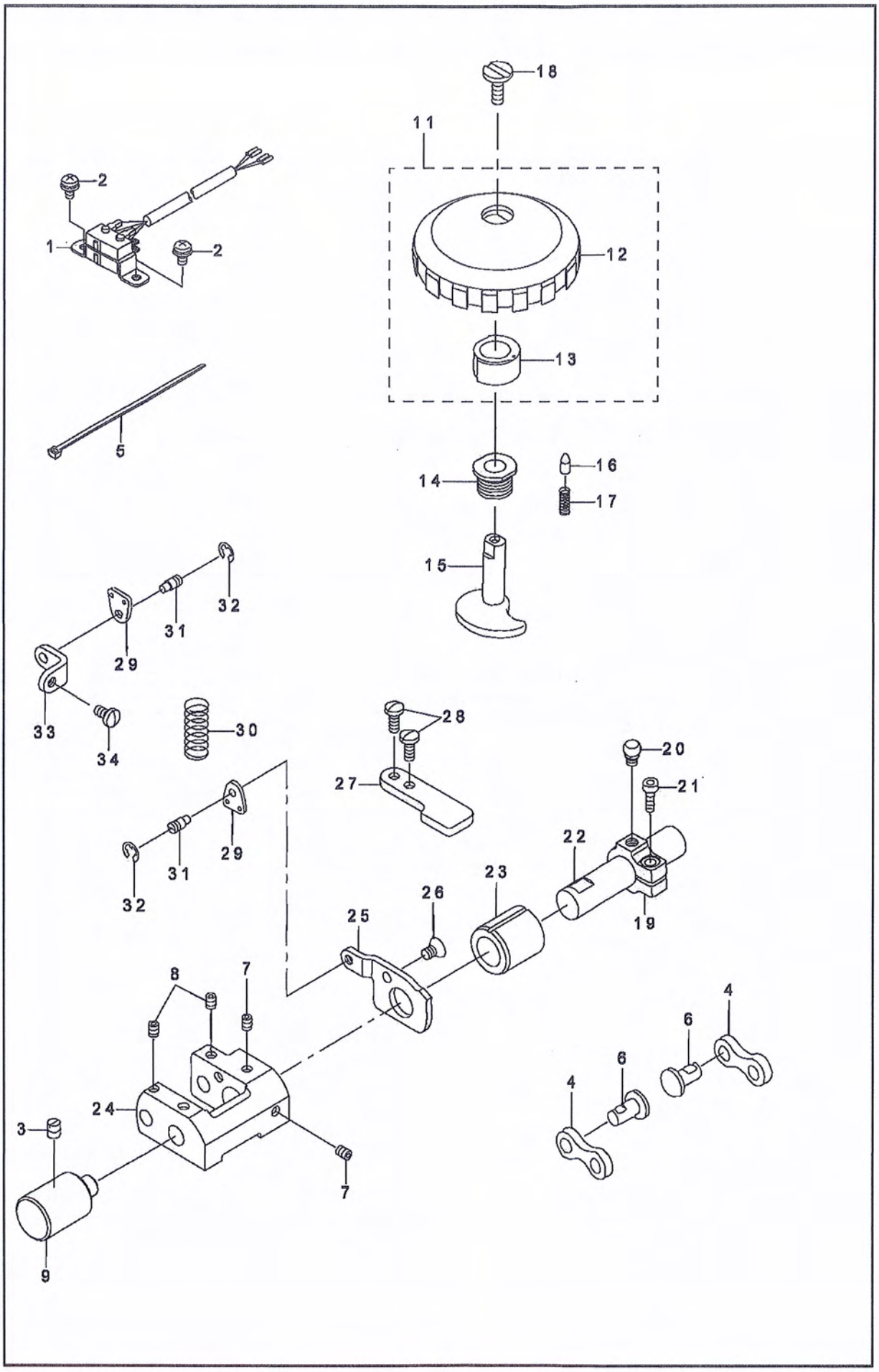

5. Pressure adjusting & upper feed mechanism components(2)

		DESCRIPTION	
1	40024852	VERTICAL DETECTOR SWITCH ASM.	1
2	SL4040881SC	SCREW M4 L=8	2
3	SS8150710SP	SCREW 15/64-28 L=7	1
4	10714509	CONNECTION LINK B	2
5	EA9500B0100	CABLE BAND	1
6	10714608	CONNECTION LINK B SUPPORT PIN	2
7	SM8050602TP	SCREW M5 L=6	2
8	SM8050602TP	SCREW M5 L=6	2
9	21337803	FEED ADJUSTING BASE SUPPORT	1
10			
11	10774354	UPPER AND LOWER DIAL ASM.	1
12	10774305	VERTICAL DIAL	<1>
13	10774404	VERTICAL CAM	<1>
14	10715100	VERTICAL DIAL SHAFT BUSHING	1
15	10715001	VERTICAL ADJUSTING CAM	1
16	10715704	VERTICAL DIAL PIN	1
17	B152652700G	SPRING	1
18	SS6110630TP	SCREW 11/64-40 L=6	1
19	21341607	VERTICAL ADJUSTING ARM	1
20	10715308	PIN	1
21	SM6051402TP	SCREW M5X0.8 L=14	1
22	21341508	VERTICAL CHANGE BASE SHAFT	1
23	10718203	FEED SHAFT FRONT METAL	1
24	10714202	VERTICAL CHANGE BELT	1
25	21339601	UPPER FEED STOPPER PLATE (A)	1
26	SM1050801SR	SCREW M5 L=8	1
27	21339700	UPPER FEED STOPPER PLATE (B)	1
28	SS7111120TP	SCREW	2
29	10713501	SPRING HOOK	2
30	10716504	VERTICAL SHAFT SPRING	1
31	B3416552000	CONNECTING ROD HINGE SCREW	2
32	RE0500000K0	E-RING	2
33	21339809	UPPER FEED DOG SPRING HOOK	1
34	SS7110830SP	SCREW 11/64-40 L=7.5	1

6. Feed mechanism components

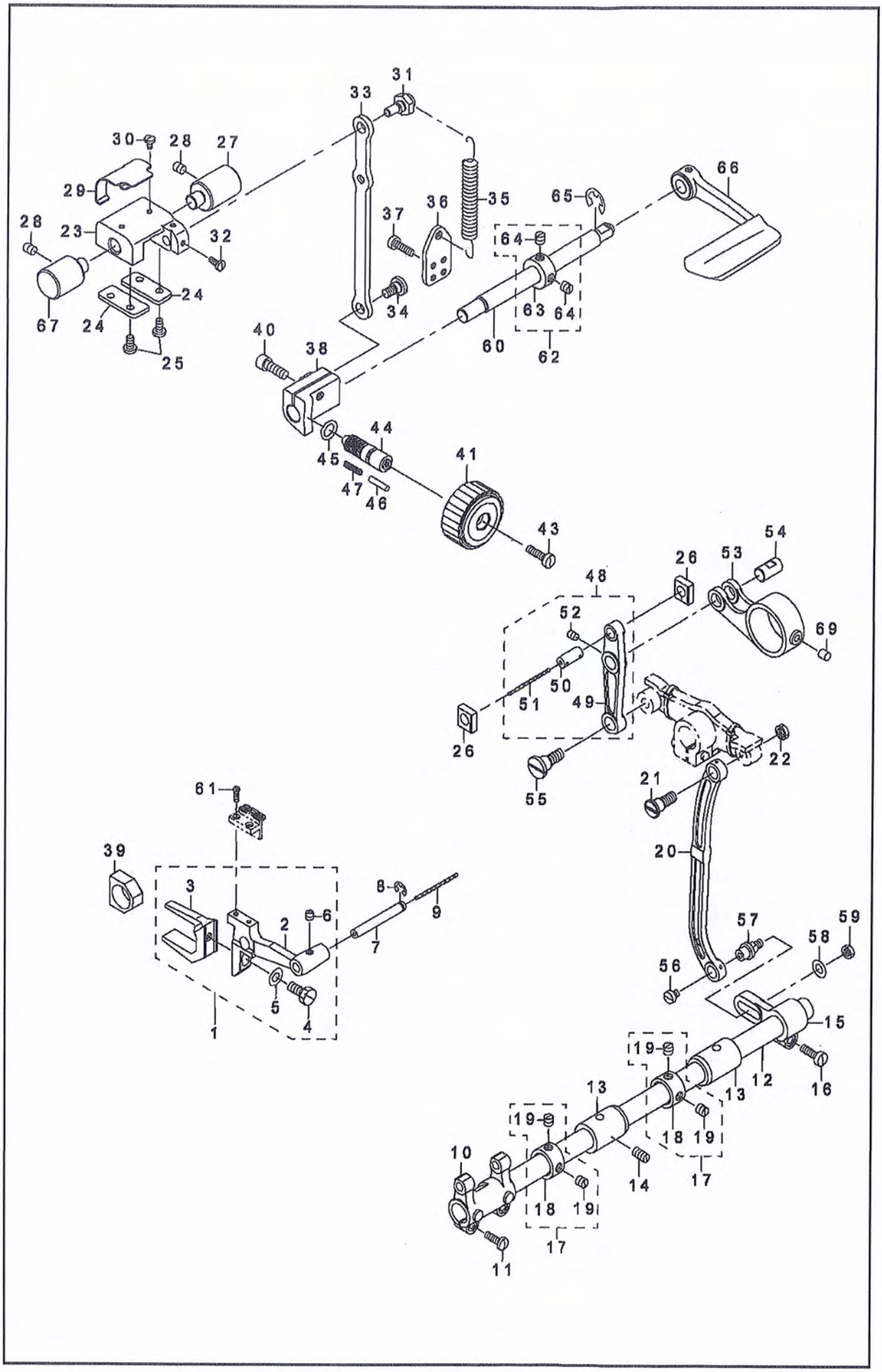

6. Feed mechanism components

		DESCRIPTION	
1	21336060	FEED BASE ASM. (B)	1
2	21336003	FEED BASE	<1>
3	10107902	FEED BAR FORK	<1>
4	SS9151440CP	SCREW 15/64-28 L=14	<1>
5	WP0621016SD	WASHER 6.2X13X1	<1>
6	SM8050502TP	SCREW M5 L=5	<1>
7	B1604012000A	FEED BAR SHAFT	1
8	RE0500711KP	SNAP RING 5	1
9	CQ202000000	OIL WICK	0.14
10	21364104	FEED ROCKER	1
11	SS7111410SP	SCREW 11/64-40 L=14	2
12	22609408	FEED ROCK SHAFT	1
13	21378302	FEED ROCK SHAFT METAL	2
14	SS8151150TP	SCREW 15/64-28 L=10.5	1
15	B3025141H00A	CONNECTING ARM	1
16	SS6121610TP	SCREW 3/16-28 L=15.5	1
17	22904155	MAIN SHAFT THRUST COLLAR ASM.	2
18	22904106	MAIN SHAFT THRUST COLLAR	<1>
19	SS8660610TP	SCREW 1/4-40 L=6	<2>
20	10205201	NEEDLE BAR FRAME ROD	1
21	SD0900701TP	HINGE SCREW D=9 H=7	1
22	NS6680320SP	NUT 9/32-28	1
23	21337506	FEED ADJUSTING BASE	1
24	21337704	FEED ADJUSTING BASE COVER	2
25	SS7110910TP	SCREW 11/64-40 L=8.5	4
26	21337407	SQUARE BLOCK	2
27	21337803	FEED ADJUSTING BASE SUPPORT	1
28	SS8150822TP	SCREW 15/64-28 L=8	2
29	21338306	FELT SUPPORT	1
30	SS7090610SP	SCREW 9/64-40 L=6	2
31	21337902	ECCENTRIC PIN	1
32	SS7090910TP	SCREW 9/64-40 L=8.5	2
33	21337308	FEED ADJUSTING ROD	1
34	SD0800402TP	HINGE SCREW D=8 H=4	1
35	21337605	SPRING	1
36	40019926	SPRING HOOK	1
37	SS6111610SP	SCREW 11/64-40 L=16	2
38	21337209	FEED ADJUSTING A	1
39	B1610512000	FEED DRIVING SLIDE BLOCK	1
40	SM6061802TP	SCREW M6 L=18	1
41	21336805	FEED DIAL A	1
42			
43	SS6121860SP	SCREW 3/16-28 L=18	1
44	22911804	FEED REGULATOR SCREW	1
45	R0092270200	RUBBER RING	1
46	22912000	FEED REGULATOR PIN	1
47	22912109	FEED REGULATOR PIN SPRING	1
48	21336656	FEED LINK ASM.	1
49	21336607	FEED LINK	<1>
50	40009103	CONNECTING FORKED LINK PIN	<1>
51	CQ202000000	OIL WICK	<0.04>
52	SM8050612TP	SCREW M5X6	<1>
53	21336706	FEED ROD A	1
54	21378906	FEED LINK PIN	1
55	SD1000801SH	HINGE SCREW D=10 H=8	1
56	SS6110520TP	SCREW 11/64-40 L=4.5	1
57	21378203	FEED ROCK SHAFT HINGE SCREW	1
58	WP0650876SD	WASHER 6.5X13X0.8	1
59	NS6150310SP	NUT 15/64-28	1
60	21336300	BACKWARD FEED LEVER SHAFT	1
61	B1611055000	SCREW FEED ROCK SHAF	2
62	CS1201010SH	THRUST COLLAR ASM. D=12 W=10	1
63	CS1201011SH	THRUST COLLAR D=12 W=10	<1>
64	SS8660610TP	SCREW 1/4-40 L=6	<2>
65	RE0900000K0	E-RING 9	1
66	21388004	REVERSE FEED ROCK SHAFT	1
67	21430400	FEED ADJUSTER SUPPORT	1
68			
69	21387402	FELT	1
70			

7. Hook shaft & lower shaft components

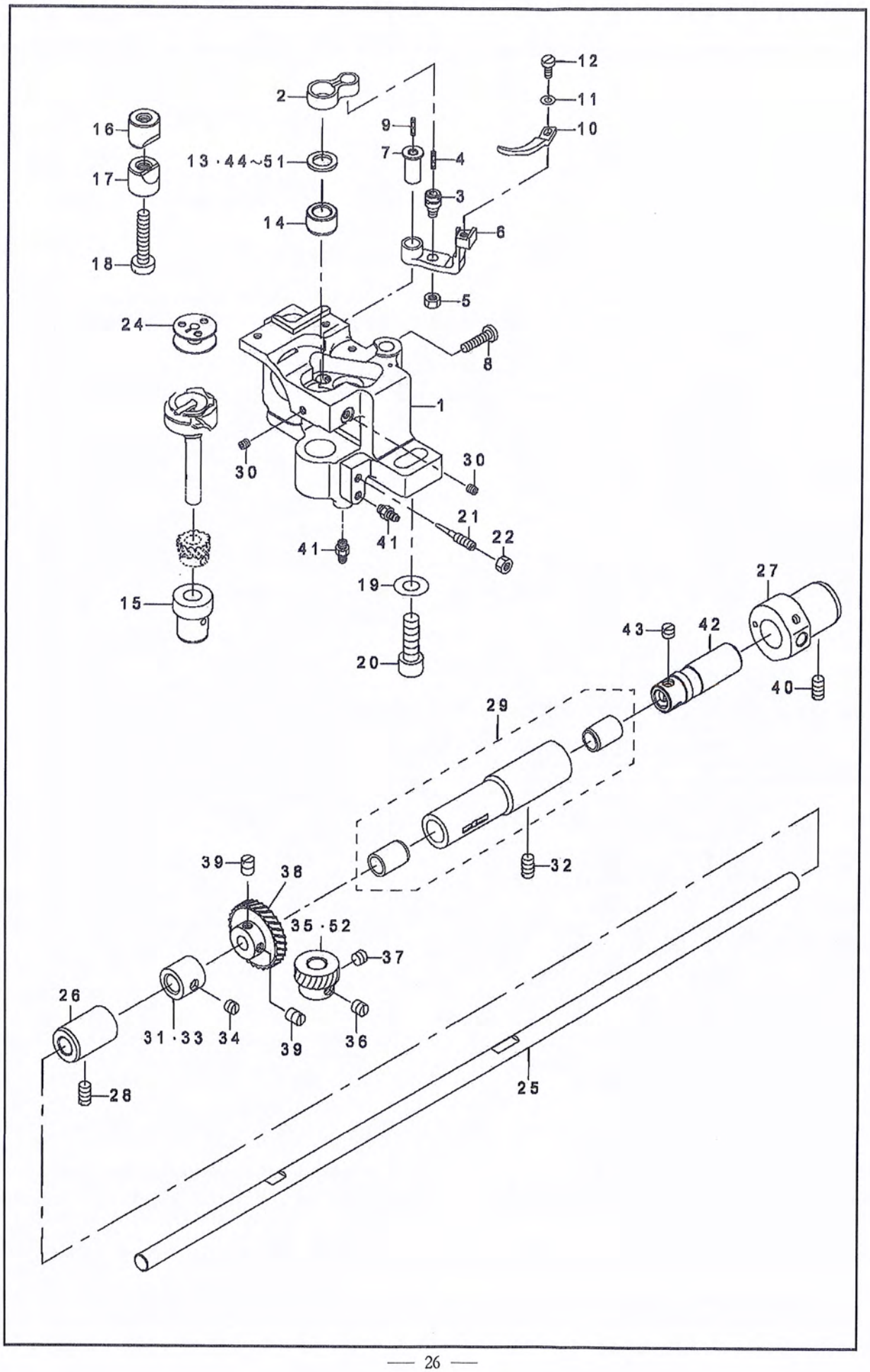

7. Hook shaft & lower shaft components

		DESCRIPTION	
1	21390000	HOOK SHAFT BASE (RIGHT)	1
2	21334909	INNER HOOK GUIDE LINK	1
3	B1821051000	CRANK SCREW STUD	1
4	CQ202000000	OIL WICK	0.01
5	NS6110420SP	NUT 11/64-40	1
6	21335500	GUIDE ARM (FOR THREAD CUTTING)	1
7	21335708	INNER HOOK GUIDE ARM SHAFT	1
8	SS7111810TP	SCREW 11/64-40 L=18	1
9	CQ202000000	OIL WICK	0.01
10	21335807	INNER HOOK GUIDE	1
11	WP0371016SD	WASHER 3.7X8X1	1
12	SS6090810SP	SCREW 9/64-40 L=7.5	1
13	10111102	THRUST WASHER 1.3	1
14	21378401	HOOK SHAFT UPPER METAL	1
15	21334701	HOOK SHAFT LOWER METAL	1
16	10109908	SADDLE INSTALLING BLOCK UPPER	1
17	10112407	SADDLE INSTALLING BLOCK LOWER	1
18	SS6153040SP	SCREW 15/64-28 L=30	1
19	WP0850002SP	WASHER 8.5X18X1.6	1
20	SM6082502TP	SCREW M8 L=25	1
21	B1834512000A	OIL ADJUSTING SCREW	1
22	NS6110420SP	NUT 11/64-40	1
23			
24	21334800	ALUMINUM BOBBIN WITH KNURL	1
25	21333604	LOWER SHAFT	1
26	21427307	LOWER SHAFT METAL REAR	1
27	22611701	PLUNGER BUSHING B	1
28	SS8151150TP	SCREW 15/64-28 L=10.5	1
29	B18035150A0	BUSHING ASM. INTERMEDIATE	1
30	SS8110422TP	SCREW 11/64-40 L=4	2
31	B1840051000	FEED DRIVING ECCENTRIC	1
32	SS8151150TP	SCREW 15/64-28 L=10.5	1
33	21378104	VERTICAL FEED CAM	1
34	SS8150510TP	SCREW 15/64-28 L=4.7	1
35	B1817051000	HOOK DRIVING SHAFT GEAR SMALL	1
36	SS8660670SP	SCREW 1/4-40 L=6.1	1
37	SS8660530TP	SCREW 1/4-40 L=4.5	1
38	B1816051000	HOOK DRIVING SHAFT GEAR LARGE	1
39	SS8660810TP	SCREW 1/4-40 L=8	2
40	SS8151150SP	SCREW 15/64-28 L=10.5	1
41	SQ1110401MZ	CONNECTING SCREW	2
42	22611909	OIL PUMP SHAFT	1
43	SS8660530TP	SCREW 1/4-40 L=4.5	3
44	10112704	THRUST WASHER 1.8	1
45	10109700	THRUST WASHER A	1
46	10109809	THRUST WASHER B	1
47	10110906	BUSHING THRUST 1.1	1
48	10111003	THRUST WASHER 1.2	1
49	10111201	THRUST WASHER F	1
50	10112506	THRUST WASHER 1.6	1
51	10112605	THRUST WASHER 1.7	1
52	40042611	HOOK DRIVING SHAFT GEAR	1

8. Thread cutting components

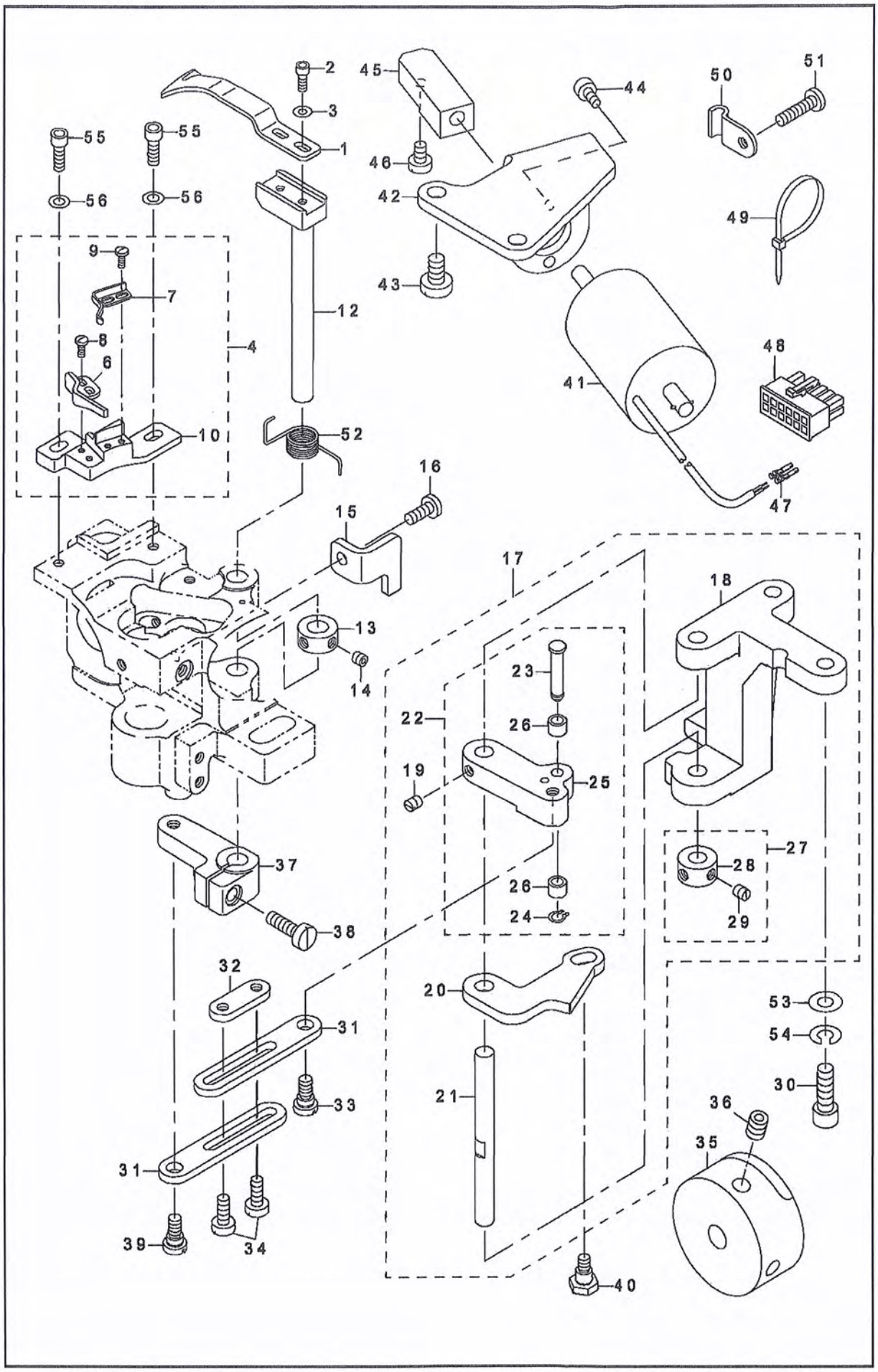

8. Thread cutting components

		DESCRIPTION	
1	21389200	MOVING KNIFE	1
2	SM6030802TP	SCREW M3X0.5 L=8	2
3	WP0320501SC	WASHER M3	2
4	21389556	FIXING KNIFE BASE (RIGHT) ASM.	1
5			
6	21389309	FIXING KNIFE	<1>
7	21389408	CLAMP SPRING	<1>
8	SS7060610SP	SCREW 3/32-56 L=5.5	<2>
9	SS7060610SP	SCREW 3/32-56 L=5.5	<2>
10	21389507	FIXED KNIFE BASE (RIGHT)	<1>
11			
12	21354907	MOVING KNIFE SHAFT	1
13	CS0790731SH	THRUST COLLAR	1
14	SS8110422TP	SCREW 11/64-40 L=4	2
15	21354501	THREAD CUTTING STOPPER (RIGHT)	1
16	SS7111120SP	SCREW 11/64-40 L=10.5	1
17	21353750	VERTICAL FITTING BASIS ASM.	1
18	21353701	VERTICAL FITTING BASIS	<1>
19	SS8110510SP	SCREW 11/64-40 L=5	<2>
20	21354006	THREAD CUTTING DRIVING PLATE	<1>
21	10116804	SHAFT	<1>
22	21353859	THREAD CUTTING ROLLER ARM	<1>
23	21353909	CAM ROLLER SHAFT	<1>
24	D2430555B00	SNAP RING	<1>
25	21353800	THREAD CUTTING ROLLER ARM	<1>
26	D2427555B00B	CAM ROLLER	<2>
27	CS070081BSH	THRUST COLLAR ASM. D=7 W=8	<1>
28	CS0700811SH	THRUST COLLAR D=7 W=8	<1>
29	SS8110510SP	SCREW 11/64-40 L=5	<2>
30	SS6151812TP	SCREW 15/64-28 L=18	2
31	21354105	CONNECTING PLATE	2
32	21354204	STOPPING PLATE	1
33	SD0640325SP	HINGE SCREW	1
34	SS6111140SP	SCREW 11/64-40 L=11	2
35	21389911	THREAD TRIMMER CAM	1
36	SS8660612TP	SCREW 1/4-40 L=6	2
37	21389705	ROCKING ARM (RIGHT)	1
38	SS6121610TP	SCREW 3/16-28 L=15.5	1
39	SD0640325SP	HINGE SCREW	1
40	SD0640482SP	HINGE SCREW D=6.35 H=4.8	1
41	21355102	THREAD CUTTING SOLENOID	1
42	21354600	SOLENOID FITTING PLATE	1
43	SS6151040SP	SCREW 15/64-28 L=10	2
44	SM6040802TP	SCREW M4X0.7 L=8	2
45	21354709	SOLENOID CONNECTING PLATE	1
46	SS6110710TP	SCREW 11/64-40 L=6.5	2
47	HK03464000A	TERMINAL FEMALE	2
48	HK034610120	HOUSING 12P	1
49	EA9500B0100	CABLE BAND	1
50	22620801	PIPE HOLDER	1
51	SS7111810TP	SCREW 11/64-40 L=18	1
52	21390208	MAINTENANCE SPRING	1
53	WP0621016SD	WASHER 6.2X13X1	2
54	WS0610002KP	SPRING WASHER	2
55	SM6041202TP	SCREW M4X0.7 L=12	2
56	WP0430800SC	WASHER M4	2

9. Automatic back components

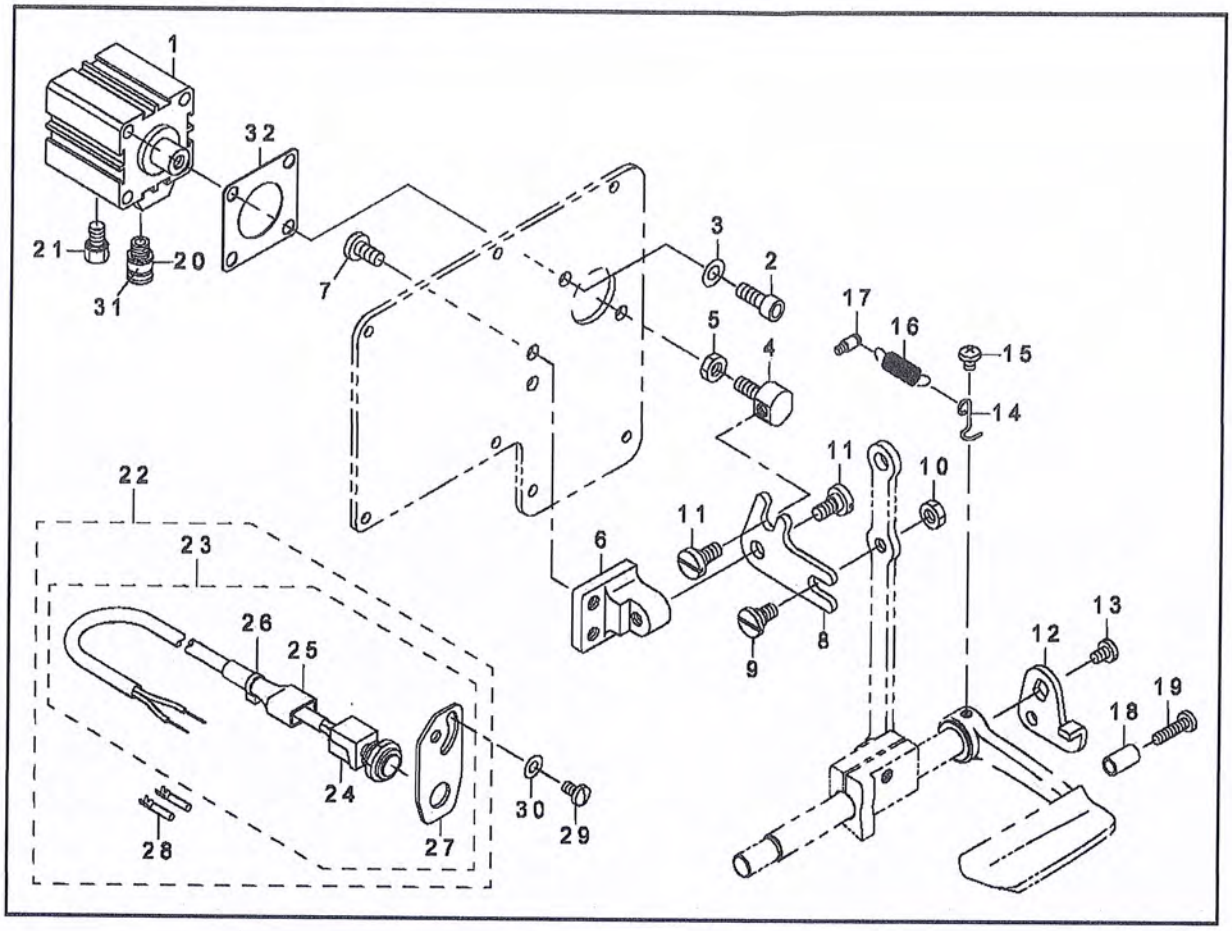

		DESCRIPTION	
1	PA320150200	JIG CYLINDER	1
2	SM6061602TP	SCREW M6 L=16	2
3	WP0641601SD	WASHER M6	2
4	21348602	CYLINDER CONNECTING SCREW	1
5	NM6060003SC	NUT M6	1
6	21348503	FITTING BASE	1
7	SS7151210SP	SCREW 15/64-28 L=12	2
8	21348701	BACKWARD FEED LINK	1
9	SD0800402TP	HINGE SCREW D=8 H=4	1
10	NS6150430SP	NUT 15/64-28	1
11	SD0800352SP	HINGE SCREW D=8 H=3.5	2
12	22656102	REVERSE FEED LINK (1)	1
13	SS7120760SP	SCREW 3/16-28 L=7.0	1
14	22656003	SPRING SUSPENSION	1
15	SS4120615SP	SCREW 3/16-28 L=6	1
16	26226209	SPRING	1
17	10120004	SPRING SUSPENSION	1
18	22952501	BACK LEVER STOPPER	1
19	SS7111810SP	SCREW 11/64-40 L=18	1
20	PJ301065104	HALF UNION	1
21	PX015101000	MUFFLER	1
22	40056366	BT SWITCH C ASM.	1
23	40056365	BT SWITCH B ASM.	<1>
24	40056364	BT SWITCH A ASM.	<1>
25	GTS01037000	CONNECTOR COVER	<1>
26	EA9500B0100	CABLE BAND	<1>
27	21388608	CABLE BAND	<1>
28	HK03464000A	TERMINAL FEMALE	<2>
29	SS7110840SP	SCREW 11/64-40 L=7.8	2
30	WP0501016SD	WASHER 5X10.5X1	2
31	HX002950000	WIRE MARK(1)	1
32	21349105	CYLINDER PACKING	1

10. Thread release components

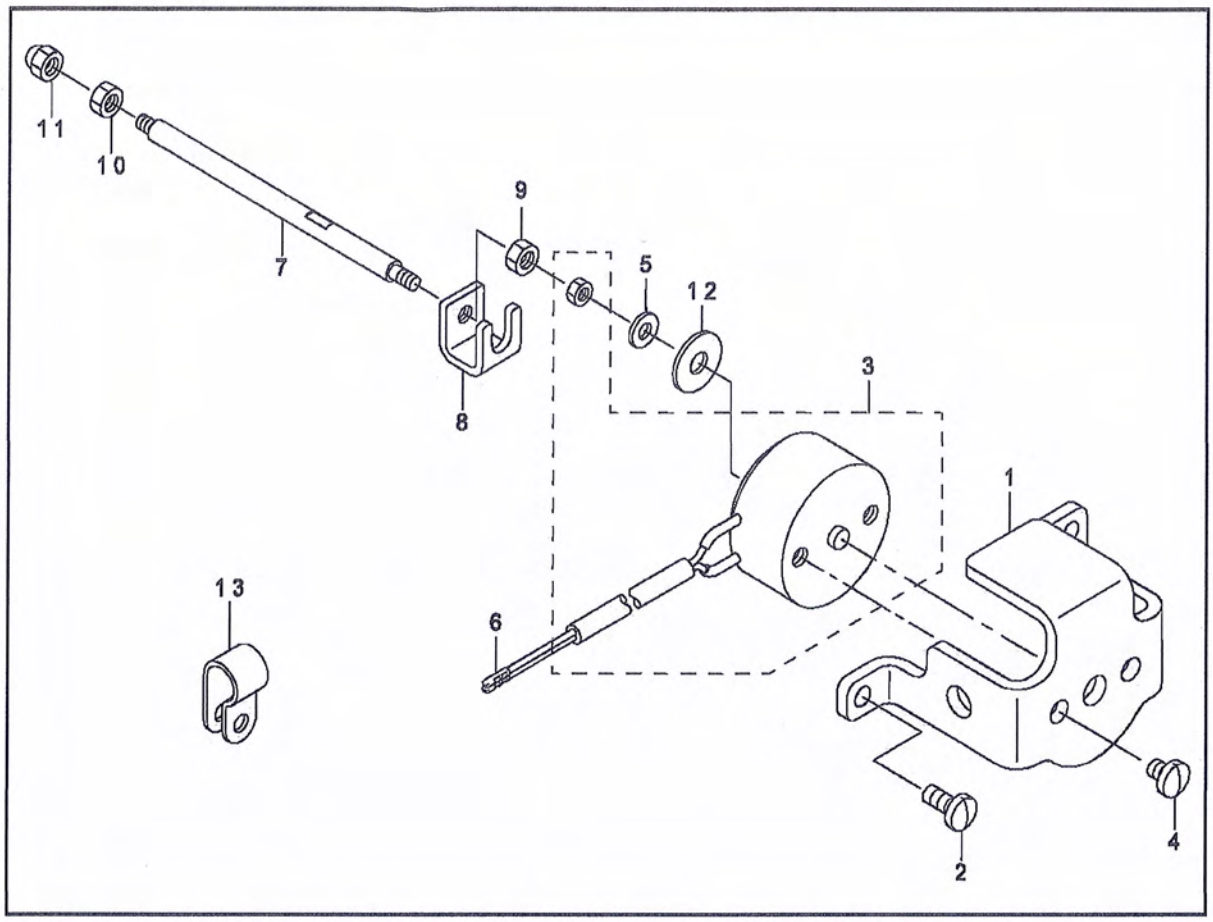

		DESCRIPTION	
1	21441407	SOLENOID INSTALLING PLATE	1
2	SS7110910TP	SCREW 11/64-40 L=8.5	2
3	21363106	TENSION RELEASE SOLENOID	1
4	SS7110570SP	SCREW 11/64-40 L=4.8	2
5	40062388	WASHER	1
6	HK03464000B	PIN CONTACT	2
7	21441209	TENSION RELEASE BAR	1
8	21441308	COUPLING	1
9	NM6040001SN	NUT M4X0.7	1
10	NM6040001SN	NUT M4X0.7	1
11	NM7040062SB	NUT M4	1
12	WP0501046SC	WASHER 5 X 13 X 1	1
13	HX00123000A	CABLE CLIP	1

11. Thread tension components

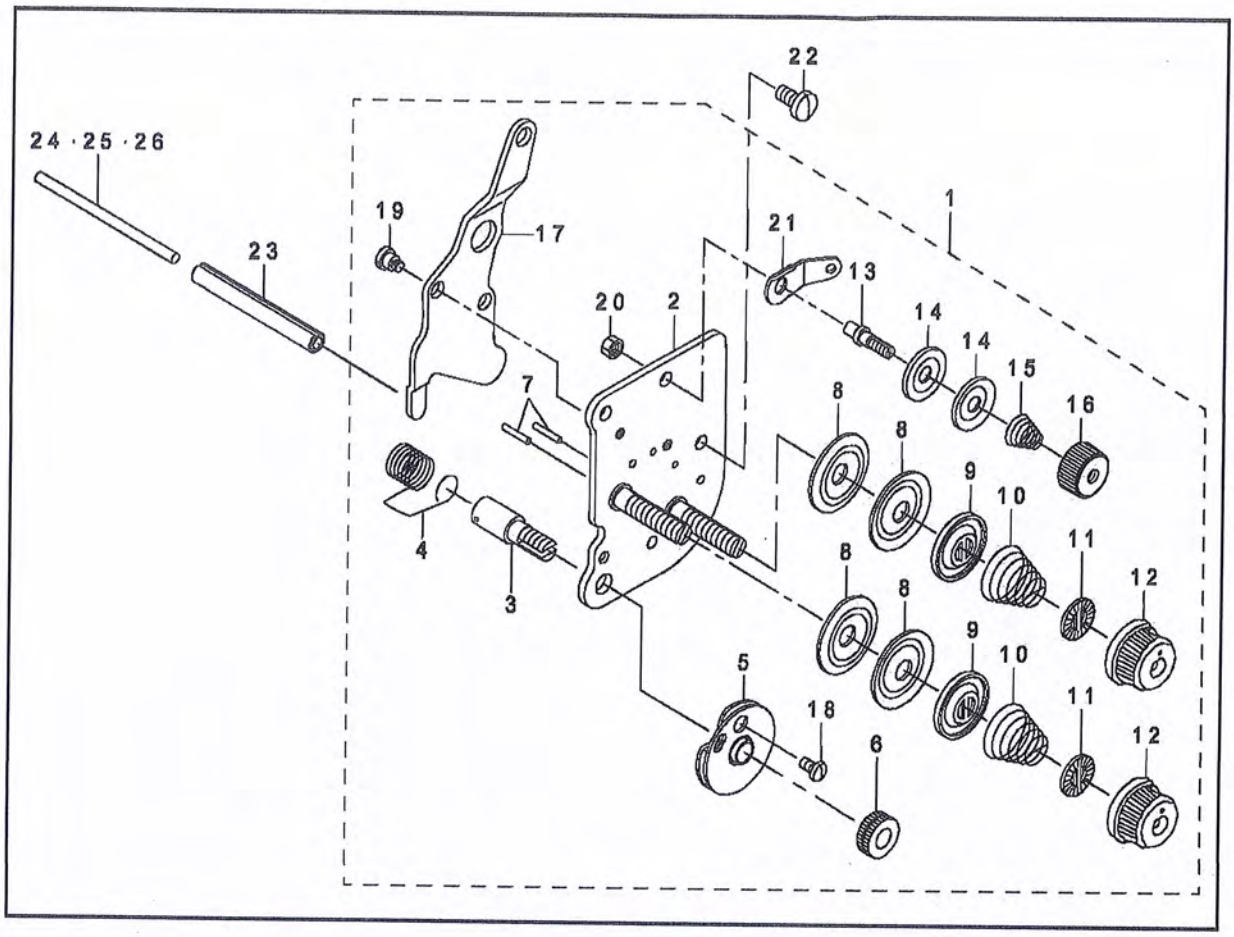

		DESCRIPTION	
1	21441068	THREAD TENSION ASM.	1
2	21441050	TENSION POST COMPL.	<1>
3	10320109	SCREW STUD	<1>
4	B3128520000	TENSION SPRING	<1>
5	B31375270A0	TAKE-UP SPRING GUIDE ASM.	<1>
6	B3125012000	THREAD TENSION NUT	<1>
7	22618201	TENSION RELEASE PIN A	<2>
8	B3126012000	THREAD TENSION DISK	<4>
9	22617906	THREAD TENSION DISK PRESSER	<2>
10	B3129526000	TENSION SPRING (1.2)	<2>
11	B3120125000	ROTATING STOPPER	<2>
12	11956802	THREAD TENSION KNOB BLUE	<2>
13	10124204	THREAD TENSION POST A	<1>
14	10741106	FIRST THREAD TENSION PLATE	<2>
15	11045101	THREAD TENSION SPRING	<1>
16	11072402	THREAD TENSION NUT	<1>
17	21441100	TENSION RELEASE PLATE	<1>
18	SS4080610SP	SCREW 1/8-44 L=6.4	<1>
19	SD0470281SP	HINGE SCREW D=4.7 H=2.8	<2>
20	NS6110310SP	NUT 11/64-40	<1>
21	D3162555B00	THREAD GUIDE	<1>
22	SS7110910TP	SCREW 11/64-40 L=8.5	2
23	PS0600502KP	SPRING PIN	1
24	21348206	TENSION RELEASE BAR	1
25	10321107	TENSION RELEASE BAR	1
26	23006406	TENSION RELEASE BAR	1

12. Lower thread winder mechanism components

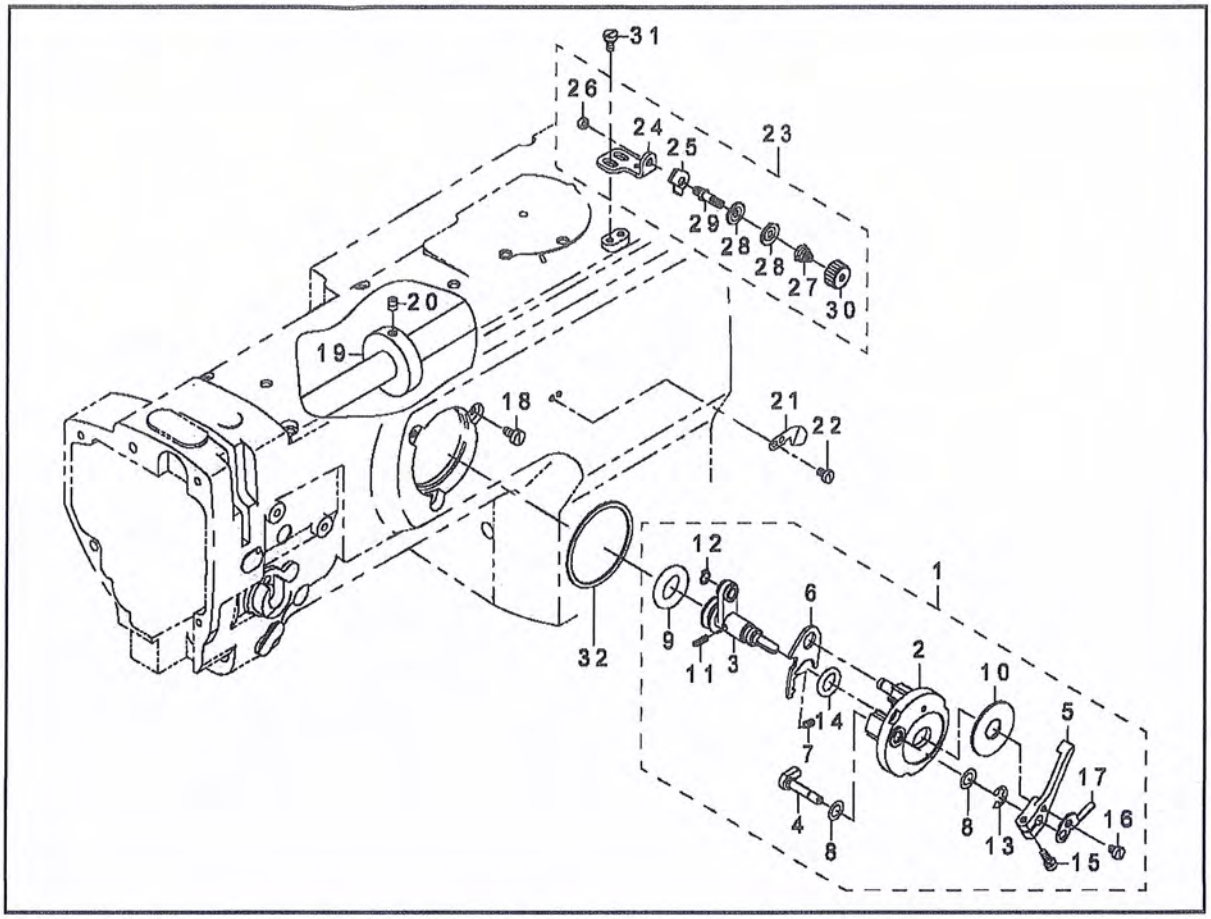

		DESCRIPTION	
1	21357967	BOBBIN DEVICE ASM.	1
2	22537658	BOBBIN FITTING BASIS COMPL.	<1>
3	21357959	BOBIN SHAFT COMPL.	<1>
4	22538151	BOBBIN CAM SHAFT COMPL.	<1>
5	23636202	BOBBIN LEVER	<1>
6	21356001	ADJUSTING PLATE	<1>
7	B152989000CA	PRESSUR FOOT SPRING	<1>
8	10618304	VERTICAL ROLLER WASHER	<2>
9	21358205	BOBBIN FRICTION GEAR	<1>
10	B3205210000	CUSHION	<1>
11	B1148555000	SPRING	<1>
12	RC0560711KP	RETAINING RING	<1>
13	RE0500000K0	E-RING	<1>
14	R0092270200	RUBBER RING	<1>
15	SS7091410SP	SCREW 9/64-40 L=13.5	<1>
16	SS6090520SP	SCREW 9/64-40 L=5.0	<1>
17	14512503	BOBBIN ADJUSTING PLATE	<1>
18	SS6110810TP	SCREW 11/64-40 L=8	3
19	10704807	BOBBIN FRICTION WHEEL	1
20	SM8050602TP	SCREW M5 L=6	2
21	10502300	THREAD CUTTER	1
22	SS6090620SP	SCREW 9/64-40 L=6	2
23	21355755	LOWER THREAD GUIDE ASM.	1
24	21355706	FITTING BASE	<1>
25	D3162555B00	THREAD GUIDE	<1>
26	NS6110310SP	NUT 11/64-40	<1>
27	D3168555H0B	TENSION SPRING NO.1	<1>
28	B3214047000	BOBBIN WINDER TENSION DISC	<2>
29	21378708	THREAD TENSION POST	<1>
30	11072402	THREAD TENSION NUT	<1>
31	SM6040800SP	SCREW	2
32	22538706	PACKING	1

13. Automatic presser lifting mechanism components

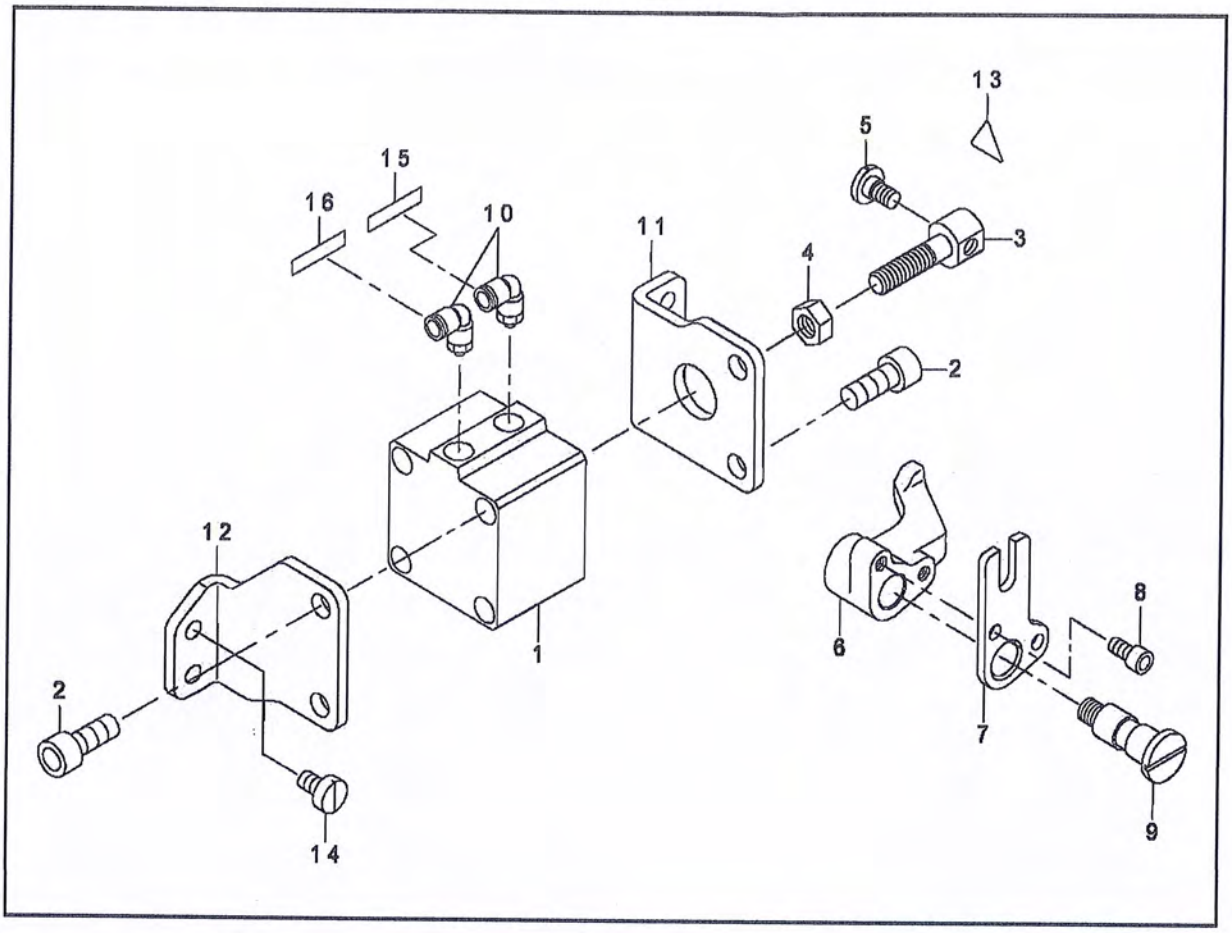

		DESCRIPTION	
1	PA400150100	AIR CYLINDER	1
2	SM6082002TP	SCREW M8 L=20	4
3	21356506	CYLINDER CONNECTING SCREW	1
4	NM6080001SE	NUT M8	1
5	SD0720331SP	HINGE SCREW D=7.24 H=3.3	1
6	21388509	PRESSER LIFTER LEVER A	1
7	21356803	PRESSER LIFTER LEVER B	1
8	SM6051002TP	SCREW M5X0.8 L=10	2
9	21356704	SHAFT	1
10	PJ304065101	ELBOW UNION 6XPT1/8	2
11	21356308	CYLINDER STAY(FRONT)	1
12	21356407	CYLINDER STAY(REAR)	1
13	CM300200001	ATTENTION SEAL	1
14	SS6151040SP	SCREW 15/64-28 L=10	4
15	HX00295000A	WIRE MARK(2)	1
16	HX0029500	WIRE MARK(3)	1

14. Air mechanism components

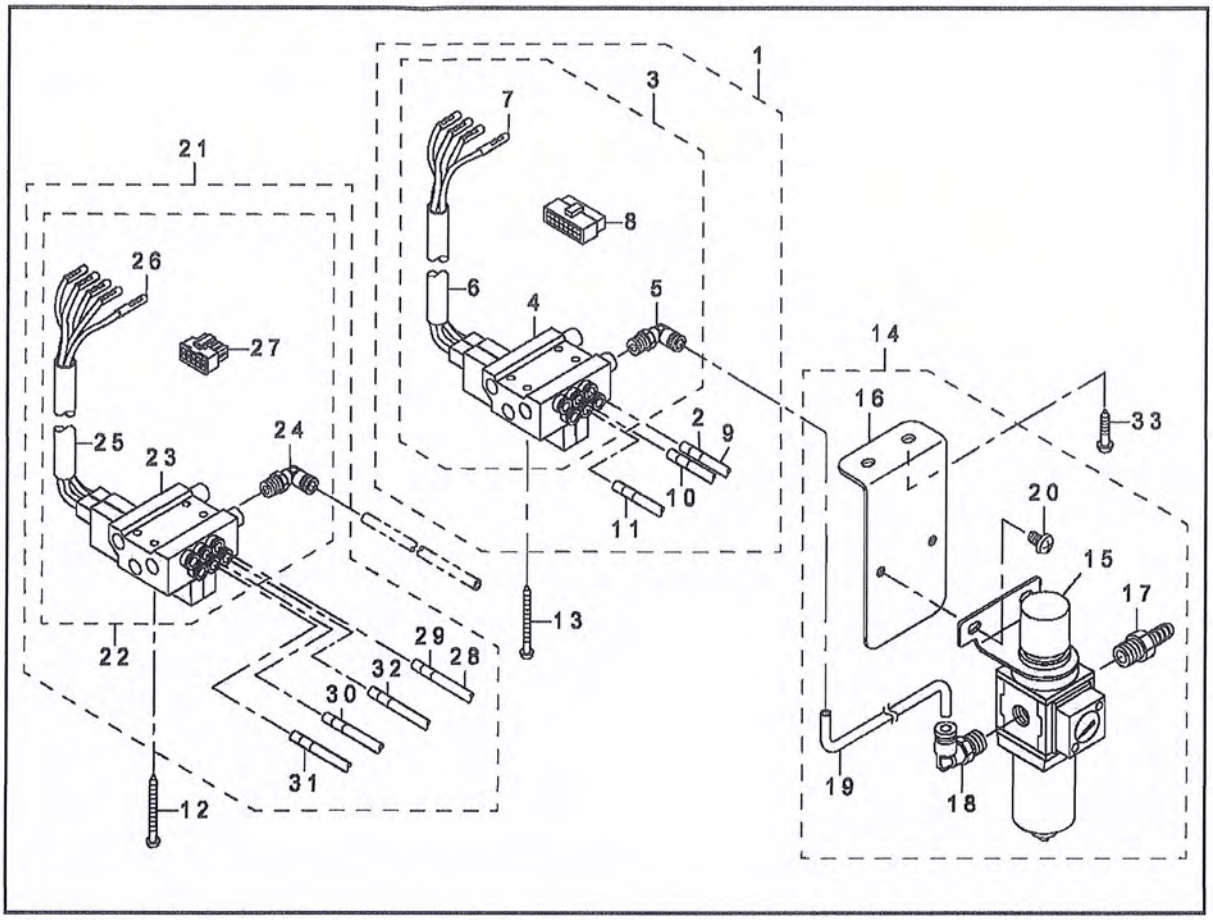

		DESCRIPTION	
1	40024965	AIR APPARATUS (B) ASM.	1
2	HX002950000	WIRE MARK(1)	<2>
3	40024857	ELECTROMAGNETIC VALVE (B) ASM.	<1>
4	GAKA2302B00	ELECTROMAGNETIC VALVE A	<1>
5	GAK29010000	ELBOW B	<1>
6	GAKA1503000	INSULATION TUBE	<1>
7	HK03464000A	TERMINAL FEMALE	<4>
8	HK034610160	16-POLE RECEPTACLE	<1>
9	BT0600401EB	TUBE	<3>
10	HX00295000A	WIRE MARK(2)	<2>
11	HX00295000B	WIRE MARK(3)	<2>
12	SK3385001SE	WOOD SCREW D=3.8 L=50	4
13	SK3385001SE	WOOD SCREW D=3.8 L=50	4
14	40038722	FILTER REGULATAR ASM.	1
15	PF0552170A0	FILTER REGULATOR	<1>
16	40038723	FILTER REGULATOR MOUNTING PLATE	<1>
17	GAK29011000	NIPPLE	<1>
18	GAK29009000	ELBOW	<1>
19	BT0600401EB	TUBE	<1>
20	SM4061001SB	SCREW M6 L=10	<1>
21	40024966	AIR APPARATUS (C) ASM.	1
22	40024858	ELECTROMAGNETIC VALVE (C) ASM.	<1>
23	GAKA2302C00	ELECTROMAGNETIC VALVE C	<1>
24	GAK29010000	ELBOW B	<1>
25	GAKA1503000	INSULATION TUBE	<1>
26	HK03464000A	TERMINAL FEMALE	<5>
27	HK034610100	10P CONNECTOR	<1>
28	BT0600401EB	TUBE	<4>
29	HX002950000	WIRE MARK(1)	<2>
30	HX00295000A	WIRE MARK(2)	<2>
31	HX00295000B	WIRE MARK(3)	<2>
32	HX00295000C	WIRE MARK(4)	<2>
33	SK3482501SE	WOOD SCREW D=4.8 L=25	2

15. Lubrication components

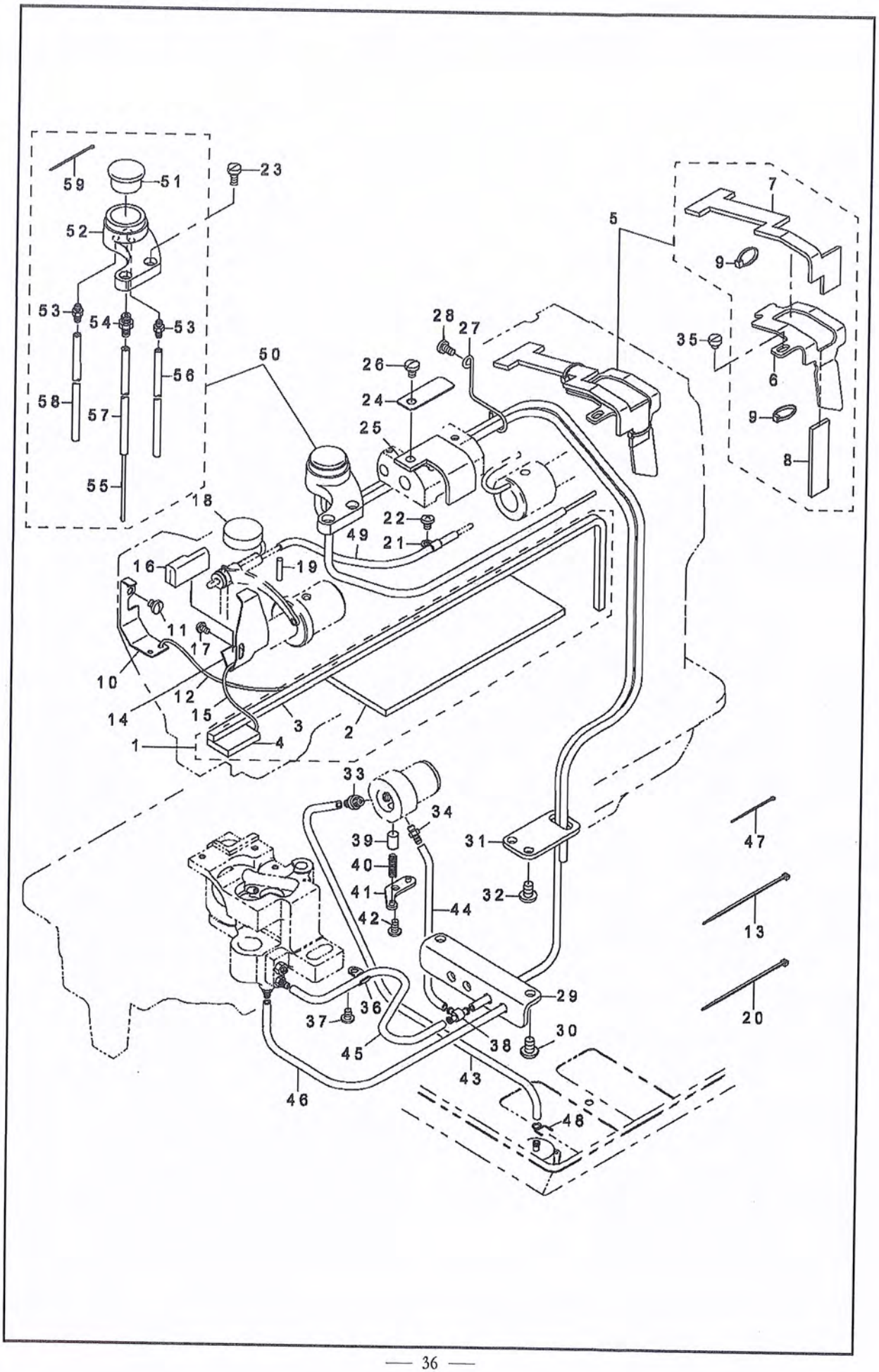

15. Lubrication components

		DESCRIPTION	
1	21345756	ARM ONCE THROUGH OIL FELT ASM.	1
2	21345707	ARM ONCE THROUGH FELT A	<1>
3	21345806	FELT B	<1>
4	21345905	FACE ONCE THROUGH FELT	<1>
5	21346358	FELT SUPPORT ASM.	1
6	21346309	FELT	<1>
7	21346507	FEED CHANGE FELT	<1>
8	21346408	FELT	<1>
9	EA9500B0000	CLIP CV-70S	<2>
10	21340708	UPPER FEED OIL BAR PLATE	1
11	SS7110510SP	SCREW 11/64-40 L=5	1
12	CQ202000000	OIL WICK	0.2
13	EA9500B0100	CABLE BAND	1
14	21347000	TAKE-UP OIL PLATE	1
15	CQ202000000	OIL WICK	0.25
16	21347208	TAKE-UP LUBRICATION FELT	1
17	SS3090610SP	SCREW 9/64-40 L=6	1
18	21346002	FELT	1
19	B1412051000	FELT	1
20	A407855000A	CLIP BAND	1
21	B3538112000	OIL RETURN TUBE HOLDER	1
22	SS4110615SP	SCREW 11/64-40 L=6	1
23	SS6111010SP	SCREW 11/64-40 L=9.5	2
24	21346101	LUBRICATION FELT PRESSER	1
25	21346200	MUTUAL VERTICAL CHANGE FELT	1
26	SS7120760SP	SCREW 3/16-28 L=7.0	1
27	21346606	PIPE SUPPORT	1
28	SS7110830SP	SCREW 11/64-40 L=7.5	1
29	21345103	LUBRICATION BRACKET	1
30	SS4150915SP	SCREW 15/64-28 L=9	2
31	21345202	OIL PIPE STAY	1
32	SS4150915SP	SCREW 15/64-28 L=9	2
33	40064409	CONNECTION SCREW ASM.	1
34	SQ1110401MZ	CONNECTING SCREW	1
35	SS6110480SP	SCREW 11/64-40 L=4.3	1
36	B3538112000	OIL RETURN TUBE HOLDER	1
37	SS4110615SP	SCREW 11/64-40 L=6	1
38	13765607	OIL CONNEC. ARM	1
39	B3534155000	PLUNGER	1
40	B1214038000	PLUNGER SPRING	1
41	B3524552000	PLUNGER THRUST PLATE	1
42	SS4110815SP	SCREW 11/64-40 L=8	1
43	23630007	TUBE	0.36
44	23630007	TUBE	0.16
45	23630007	TUBE	0.22
46	23630007	TUBE	0.35
47	EA9500B0100	CABLE BAND	11
48	10126803	OIL TUBE HOLDER	1
49	BT0600402EA	OIL TUBE	0.12
50	40051503	ARM OIL TANK ASM.	1
51	B3520586000	OIL SIGHT WINDOW	<1>
52	21345608	ARM OIL TANK	<1>
53	SQ1110401MZ	CONNECTING SCREW	<2>
54	SQ1150451MZ	CONNECTING SCREW	<1>
55	CQ252000000	OIL WICK	<0.7>
56	23630007	TUBE	<0.5>
57	23630007	TUBE	<0.2>
58	23630007	TUBE	<0.6>
59	EA9500B0100	CABLE BAND	<3>

16. Hook components

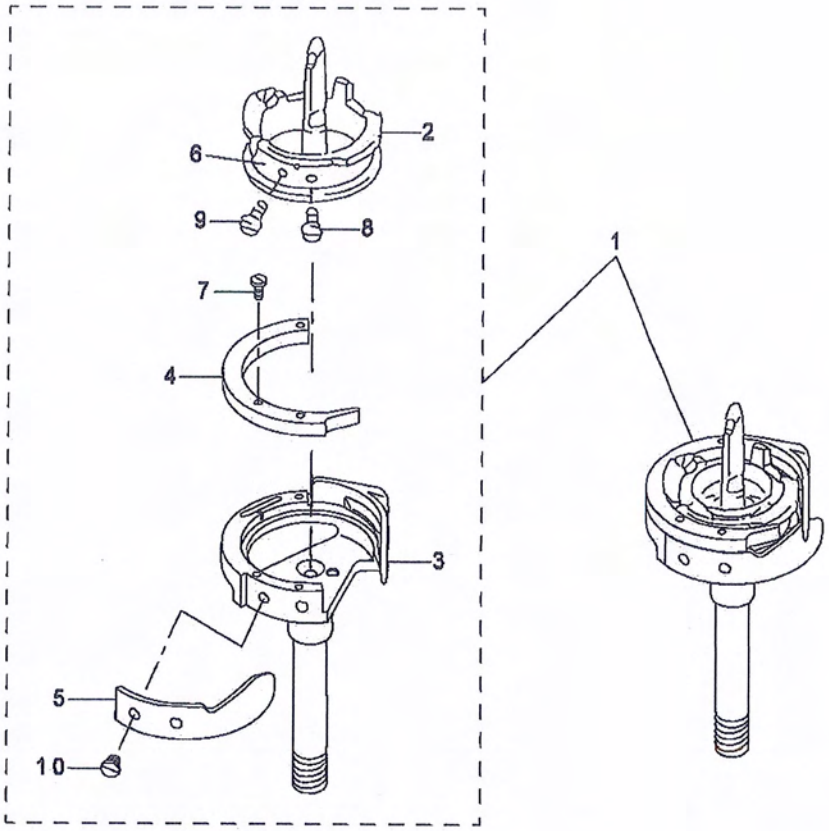

16. Hook components

		DESCRIPTION	
1	21387055	THREAD TRIMMER HOOK ASM.	1
2	21387006	INNER HOOK	<1>
3	21334503	OUTER HOOK	<1>
4	B1830563B0A	INNER HOOK HOLDER B	<1>
5	21334206	NEEDLE HOLDER	<1>
6	10722908	TENSION SPRING	<1>
7	10112803	SCREW	<3>
8	10723302	ADJUSTING SCREW	<1>
9	10723401	TENSION SPRING SETSCREW	<1>
10	22814008	SCREW	<2>

17. Belt cover & oil reservoir components

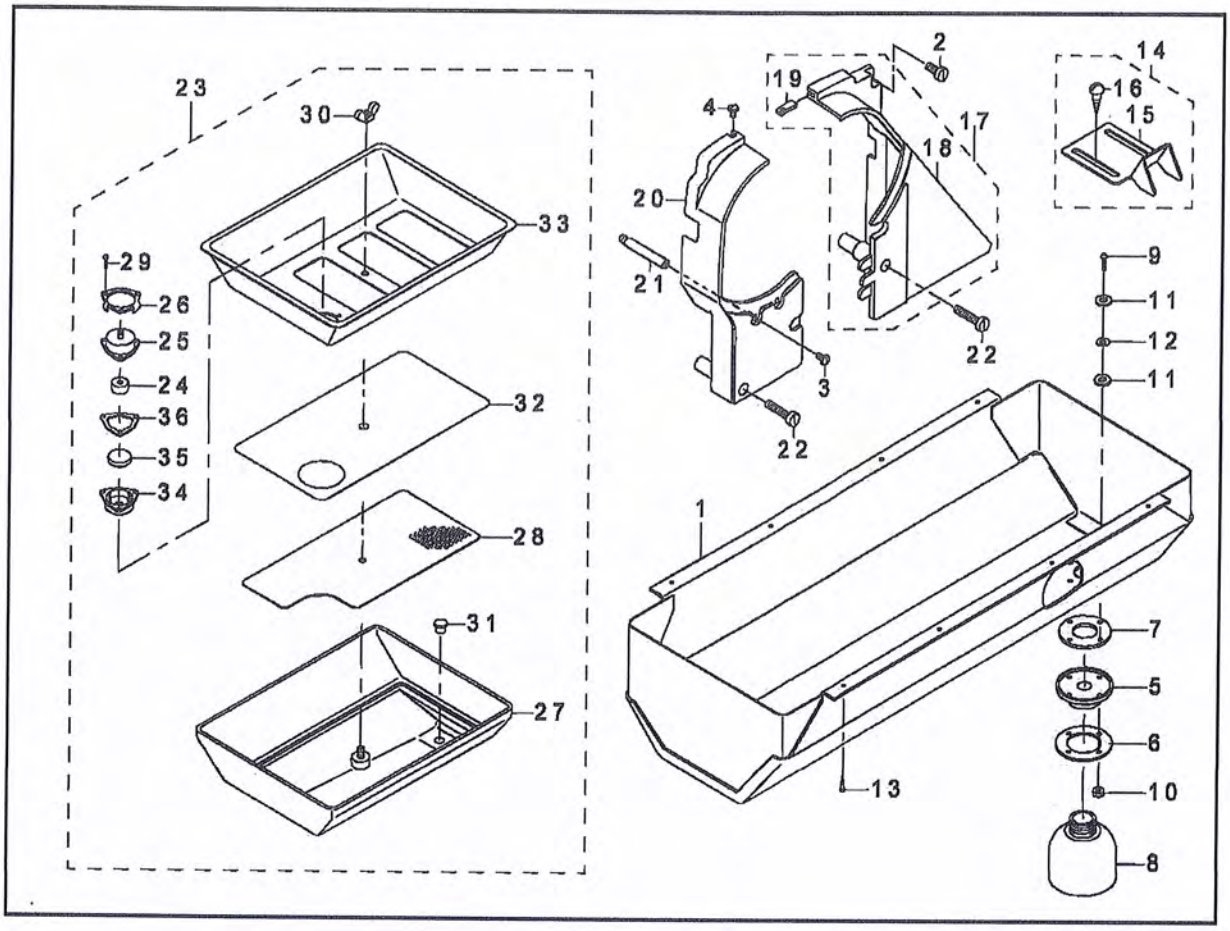

		DESCRIPTION	
1	21351457	OIL RESERVOIR ASM.	1
2	SS6151440SP	SCREW 15/64-28 L=14	1
3	SS7110840SP	SCREW 11/64-40 L=7.8	1
4	SS5110740TP	SCREW 11/64-40 L=6.5	1
5	40025299	OIL POT JOINT	1
6	21379003	OIL MANAGEMENT WASHER	1
7	B8112220000	OIL SEAL	1
8	40025300	OIL POT	1
9	SM3031401SE	SCREW M3X0.5 L=14	4
10	NM6030001SC	NUT M3	4
11	10748101	OIL REMOVING SETSCREW PACKING	8
12	WP0320501SC	WASHER M3	4
13	SK3241601SC	WOOD SCREW D=2.4 L=16	8
14	10755254	BELT COVER C ASM. (FOR JE)	1
15	10755205	BELT COVER C(JE)	<1>
16	SK3482500SC	WOOD SCREW D=4.8 L=25	<2>
17	21351150	BELT COVER ASM. (RIGHT)	1
18	21351101	BELT COVER (RIGHT)	<1>
19	21351002	BELT COVER AUXILIARY PLATE	<1>
20	21351200	BELT COVER (LEFT)	1
21	D8232241E00	BELT COVER SUPPORT A	1
22	SS6153040SP	SCREW 15/64-28 L=30	2
23	21345350	OIL TANK ASM.	1
24	10727303	FILTER	<1>
25	10727204	FILTER CAP	<1>
26	10753002	FILTER PLATE	<1>
27	21345301	OIL TANK	<1>
28	21346804	COVER(LOWER)	<1>
29	SM6021000TP	SCREW	<3>
30	NM9050001SC	WING NUT M5X0.8	<1>
31	TA0800704R0	RUBBER PLUG	<1>
32	21346903	FILTER	<1>
33	21346705	COVER(REAR)	<1>
34	21345509	FILTER CASE	<1>
35	B8228125000	OIL RESERVOIR MAGNET	<1>
36	10739209	FILTER PACKING	<1>

18. DL mechanism (option) components

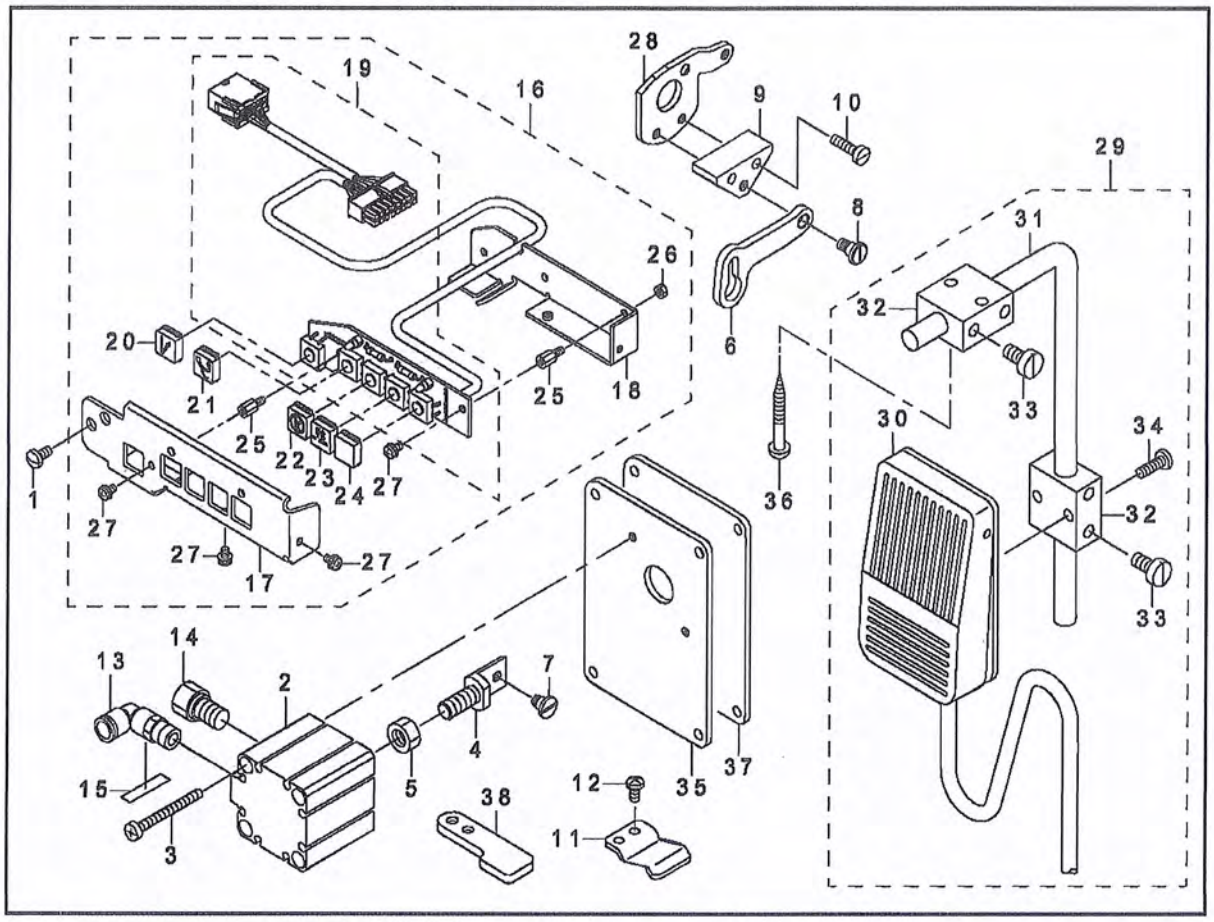

		DESCRIPTION	
1	SS7110840SP	SCREW 11/64-40 L=7.8	2
2	PA320200100	TIG CYLINDER	1
3	SM6044002TP	SCREW	2
4	21438403	CYLYNDER CONNECTING SCREW	1
5	NM6080721SE	NUT M8	1
6	21438502	MUTUAL VERTICAL LINK	1
7	SD0600403TP	HINGE SCREW	1
8	SD0600454TP	SHOULDER SCREW	1
9	21438601	MUTUAL VERTICAL LINK SPASER	1
10	SS6111610SP	SCREW 11/64-40 L=16	2
11	21438700	MUTUAL VERTICAL LINK SUPPORT	1
12	SS4110815SP	SCREW 11/64-40 L=8	2
13	PI304065101	ELBOW UNION 6XPT1/8	1
14	PX015101000	MUFFLER	1
15	HX00295000C	WIRE MARK(4)	1
16	40024849	5RANGE SWITCH ASM.	1
17	21442603	SWITCH COVER	<1>
18	21442702	SWITCH CIRCUIT FITTING BASE	<1>
19	40024848	5RANGE SWITCH SUB(A) ASM.	<1>
20	21442900	KEY TOP A	<1>
21	21443007	KEY TOP B	<1>
22	21443106	KEY TOP C	<1>
23	21443205	KEY TOP D	<1>
24	21443809	KEY TOP F	<1>
25	HX00354000N	SPACER	<4>
26	NM6030001SC	NUT M3	<3>
27	SL4030631SC	SCREW M3X6	<4>
28	21438106	STOPPER PLATE B	1
29	40025036	KNEE SWITCH ASM.	1
30	40025035	KNEE SWITCH ASM.	<1>
31	MAT80231T00	DRIVING BAR T002	<1>
32	MAT80230T00	KNEE SWITCH SUPPORT BASE	<2>
33	SS6151220SP	SCREW 15/64-28 L=11.5	<4>
34	SS7111410SP	SCREW 11/64-40 L=14	<2>
35	21437207	WINDOW PLATE F	1
36	SK3514000SC	WOOD SCREW D=5.1 L=40	2
37	21437306	WINDOW PLATE E PACKING	1
38	21438205	UPPER FEED STOPPER PLATE	1

19. Thread stand components

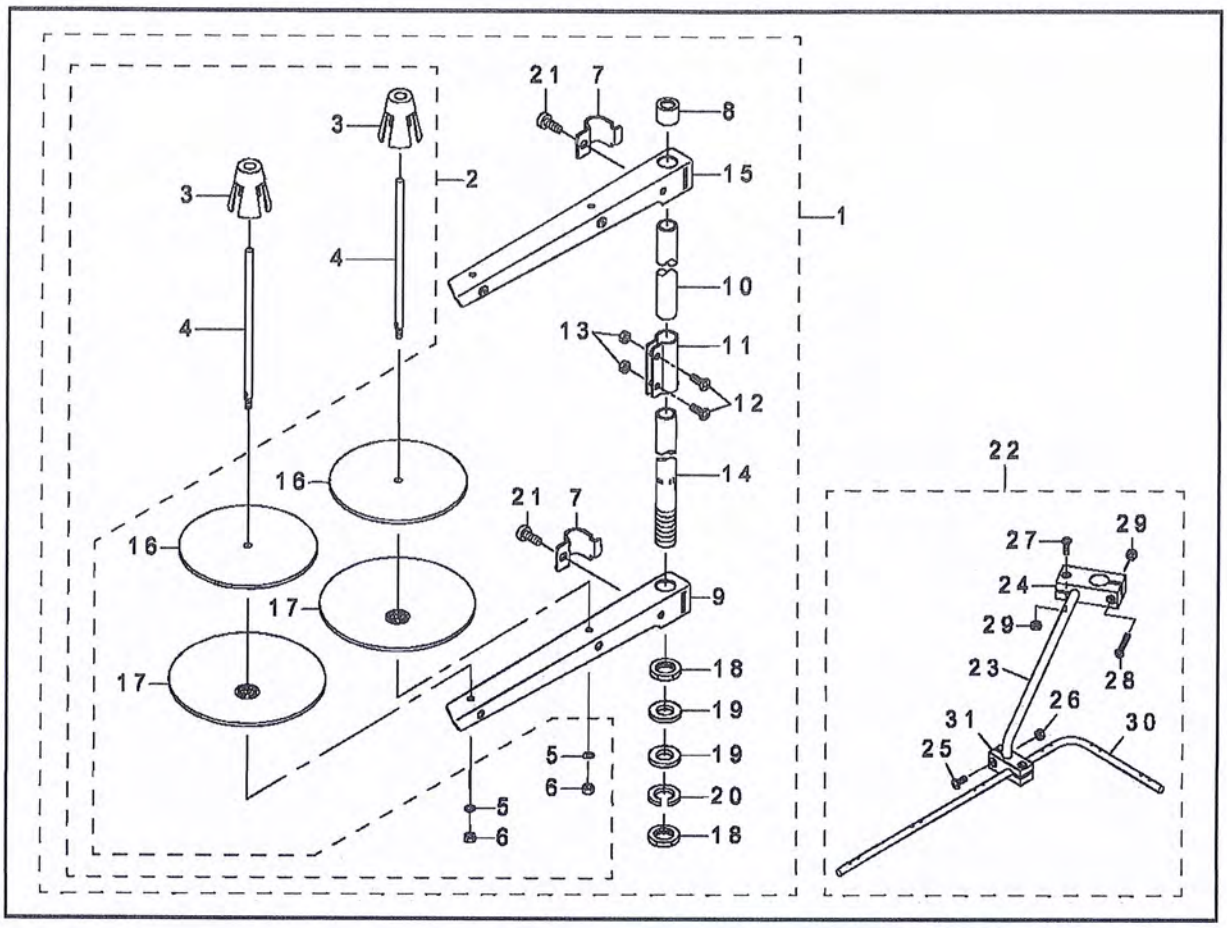

		DESCRIPTION	
1	22930358	THREAD STAND ASM.	1
2	40062684	SPOOL PIN ASM.	<1>
3	22931109	SPOOL RETAINER	<2>
4	22931000	SPOOL PIN	<2>
5	WS0510002KN	SPRING WASHER	<2>
6	NM6050001SE	NUT M5	<2>
7	22930705	THREAD GUIDE ARM JOINT	<2>
8	22931406	SPOOL REST ROD RUBBER CAP	<1>
9	22930507	SPOOL REST ARM	<1>
10	22930408	SPOOL REST ROD UPPER	<1>
11	22931307	SPOOL REST ROD JOINT	<1>
12	SM4051405SE	SCREW M5 L=14	<2>
13	NM6050001SE	NUT M5	<2>
14	22930309	SPOOL REST ROD LOWER	<1>
15	22930556	THREAD STANDING ARM ASM.	<1>
16	22930903	SPOOL REST CUSHION	<2>
17	22930804	SPOOL REST	<2>
18	NM6160511SE	NUT M16X1.5	<2>
19	WP1612616SE	WASHER 16X30X2.6	<2>
20	WS1643202KR	SPRING WASHER	<1>
21	SM6061610SC	SCREW M6 L=16	<2>
22	26910059	THREAD GUIDE ARM ASM.	1
23	13168109	THREAD GUIDE ARM	<1>
24	13168208	THREAD GUIDE ARM BASE	<1>
25	SM4041001SC	NUT M4X0.7	<2>
26	NM6040002SE	SCREW M4 L=12	<2>
27	SM4041201SC	SCREW M4 X 20	<1>
28	SM4042001SC	NUT M4X0.7	<1>
29	NM6040002SE	NUT M4X0.7	<2>
30	13167903	THREAD GUIDE ARM	<1>
31	13168000	THREAD GUIDE BASE LOWER	<1>

20. Optional parts (additional spring for presser bar) components

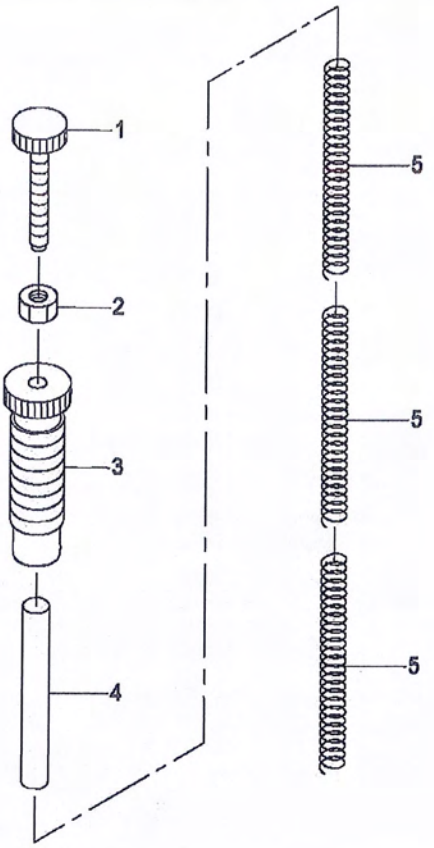

		DESCRIPTION	
1	21006507	ADJUST SCREW B	1
2	NS6110530SP	NUT 11/64-40	1
3	21006408	ADJUST SCREW A	1
4	21342407	GUIDE SHAFT	1
5	21006002	ADJUST SPRING B	3

21. Suspension square (option) components

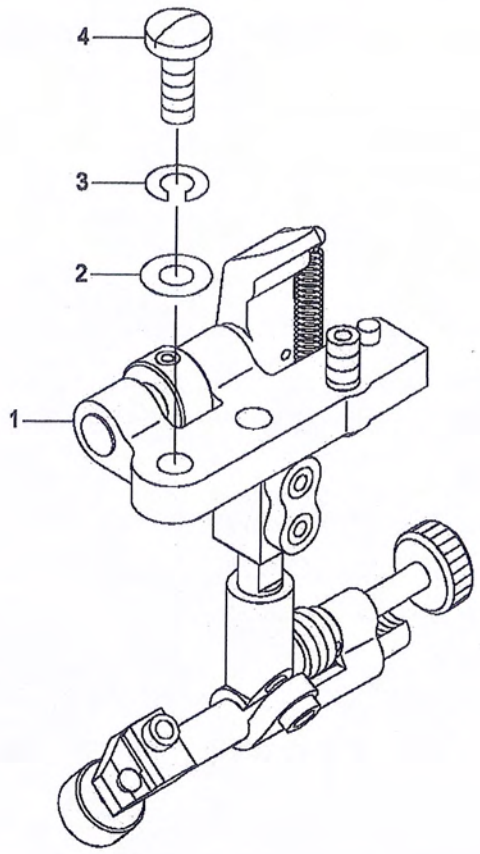

		DESCRIPTION	
1	MAH152010A0	RULER	1
2	WP0621016SD	WASHER 6.2X13X1	2
3	WS0610002KN	SPRING WASHER 6.1X12.2X1.5	2
4	SS7151610SP	SCREW 15/64-28 L=16	2

22. Accessories parts components

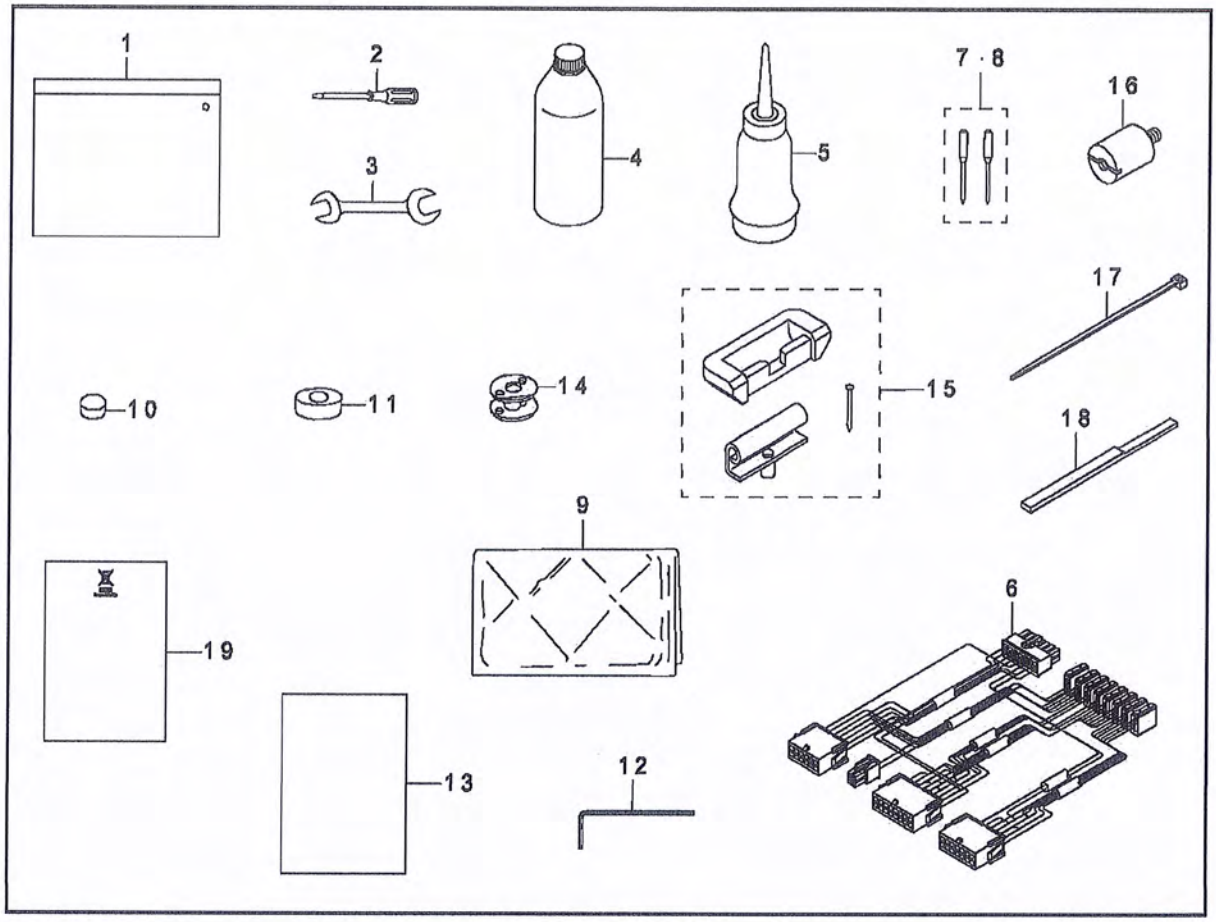

		DESCRIPTION	
1	21413158	ACCESSORY BAG ASM.	1
2	22933006	SCREW DRIVER LARGE	1
3	B9113012000	WRENCH (9X10)	1
4	MDFRX2700C0	NEW DEFRIX OIL NO.2(700CC)	1
5	J1067000000	OILER	1
6	40064512	RELAY CORD F ASM.	1
7	M13517B1602	NEEDLE 135X17 #160-2	1
8	M13517B1202	NEEDLE 135X17 #120-2	1
9	22933303	VINYL COVER	1
10	B8206012000	FELT CUSHION	4
11	B8209012000	RUBBER CUSHION	4
12	40079298	WRENCH	1
13	40079080	INSTRUCTION MANUAL(REVISED)	1
14	21334800	ALUMINUM BOBBIN WITH KNURL	1
15	21413257	RUBBER HINGE ASM.	1
16	B8404352000	BELT COVER SUPPORT STUD	2
17	EA9500B0100	CABLE BAND	3
18	21390307	FIXING KNIFE GAUGE	1
19	CM600100201	WEEE INFORMATION SHEET	1

23. Sewing gauges 1515 & 1515-AUT

Item		WF 1515	
Throat plate	Standard		
		Ref. No.	1
		Parts No.	B1109-563-000
	Without teeth Option		
		Ref. No.	2
		Parts No.	B1109-562-D00
Feed dog	Standard	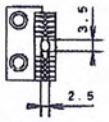	
		Ref. No.	3
		Parts No.	213-49204
	Option	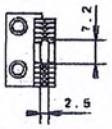	
		Ref. No.	4
		Parts No.	213-49303
		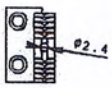	
		Ref. No.	5
		Parts No.	B1613-563-E00

		Working foot		Presser foot	
WF 1515	Standard	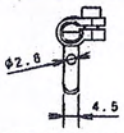		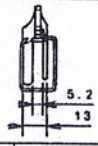	
		Ref. No.	6	Ref. No.	7
		Parts No.	B1470-053-0A0	Parts No.	213-50152
	Option	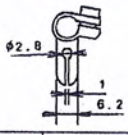		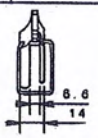	
		Ref. No.	8	Ref. No.	9
		Parts No.	D1470-241-EA0	Parts No.	B1525-241-HA0

23. Sewing gauges 1515 & 1515-AUT

1	B1109563000	THROAT PLATE	1
2	B1109562D00	THROAT PLATE	1
3	21349204	FEED DOG (2.5X3.5)	1
4	21349303	FEED DOG (2.5X7.2)	1
5	B1613563E00	FEED DOG	1
6	B14700530A0	WALKING FOOT ASM.	1
7	21350152	PRESSER FOOT ASM.	1
8	D1470241EA0	WALKING FOOT ASM.	1
9	B1525241HA0	PRESSER FOOT ASM.	1
			1

GLOBAL WF 1515 AE

WF 1515 AE - Single needle walking foot machine specially designed for trimming and binding. Machine has a left hand vertical hook and front knife cutting. Binder is not included. Stitch length 9 mm.

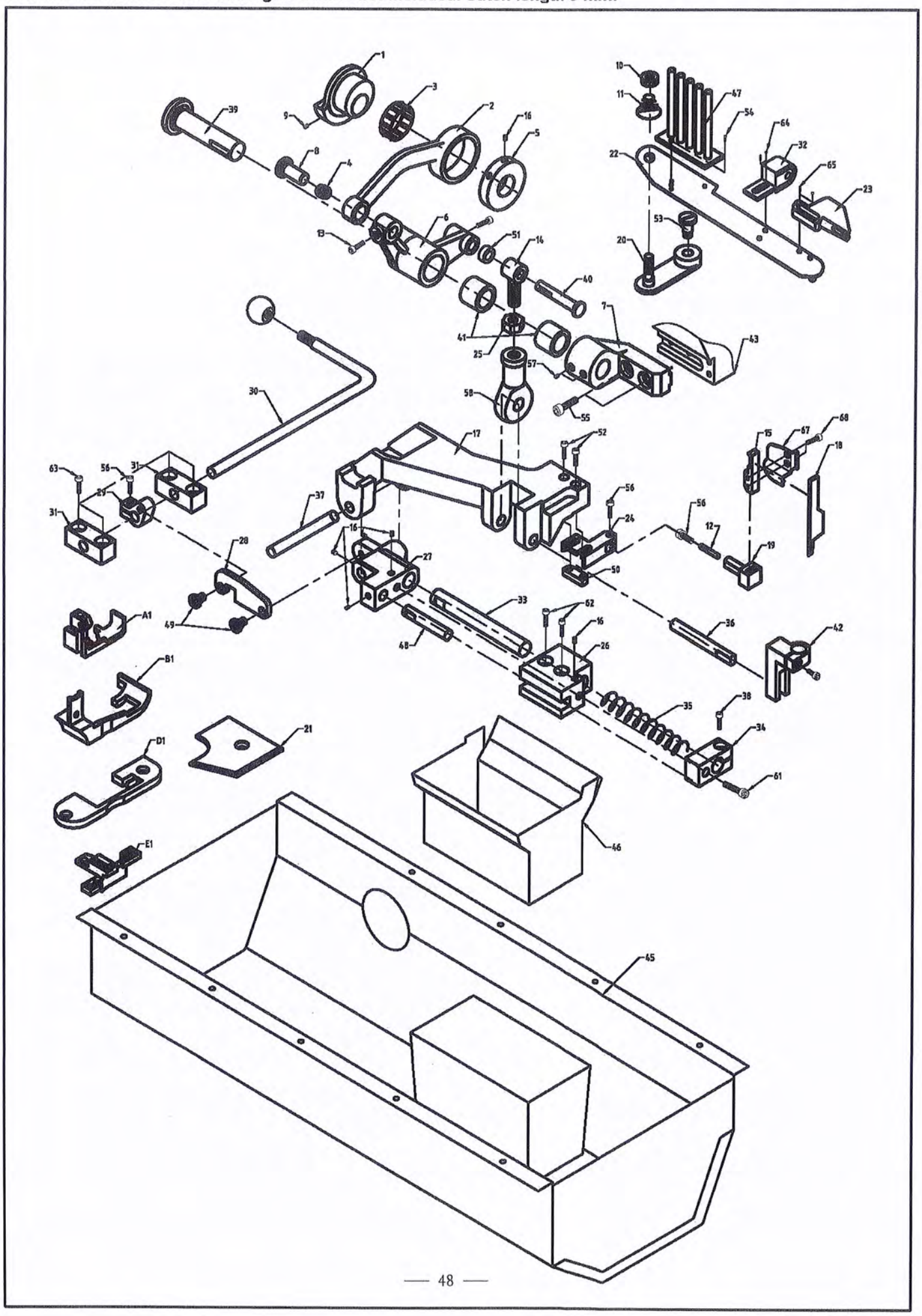

GLOBAL WF 1515 AE

1	AE01			1	
2	AE02			1	
3	AE03		K30X34X13	1	
4	AE04		K9X12X10	1	
5	AE05			1	
6	AE06			1	
7	AE07			1	
8	AE08			1	
9	AE09		SM1/4"XT40-6	2	AE01
10	AE10			1	
11	AE11			1	
12	AE12			1	
13	AE13		M5X12	2	AE06
14	AE14			1	
15	AE15			1	
16	AE16		M5X5	7	AE05 28 27
17	AE17			1	
18	AE18			1	
19	AE19			1	
20	AE20			1	
21	AE21			1	
22	AE22			1	
23	AE23			1	
24	AE24			1	
25	AE25		M8	1	
26	AE26			1	
27	AE27			1	
28	AE28			1	
29	AE29			1	
30	AE30			1	
31	AE31			1	
32	AE32			1	
33	AE33			1	
34	AE34			1	
35	AE35			1	
36	AE36			1	
37	AE37			1	
38	AE38		M5X14	5	AE 34
39	AE39			1	
40	AE40			1	
41	AE41			2	
42	AE42			1	
43	AE43			1	
44	AE44			1	
45	AE45			1	

GLOBAL WF 1515 AE

WF 1515 AE - Single needle walking foot machine specially designed for trimming and binding. Machine has a left hand vertical hook and front knife cutting. Binder is not included. Stitch length 9 mm.

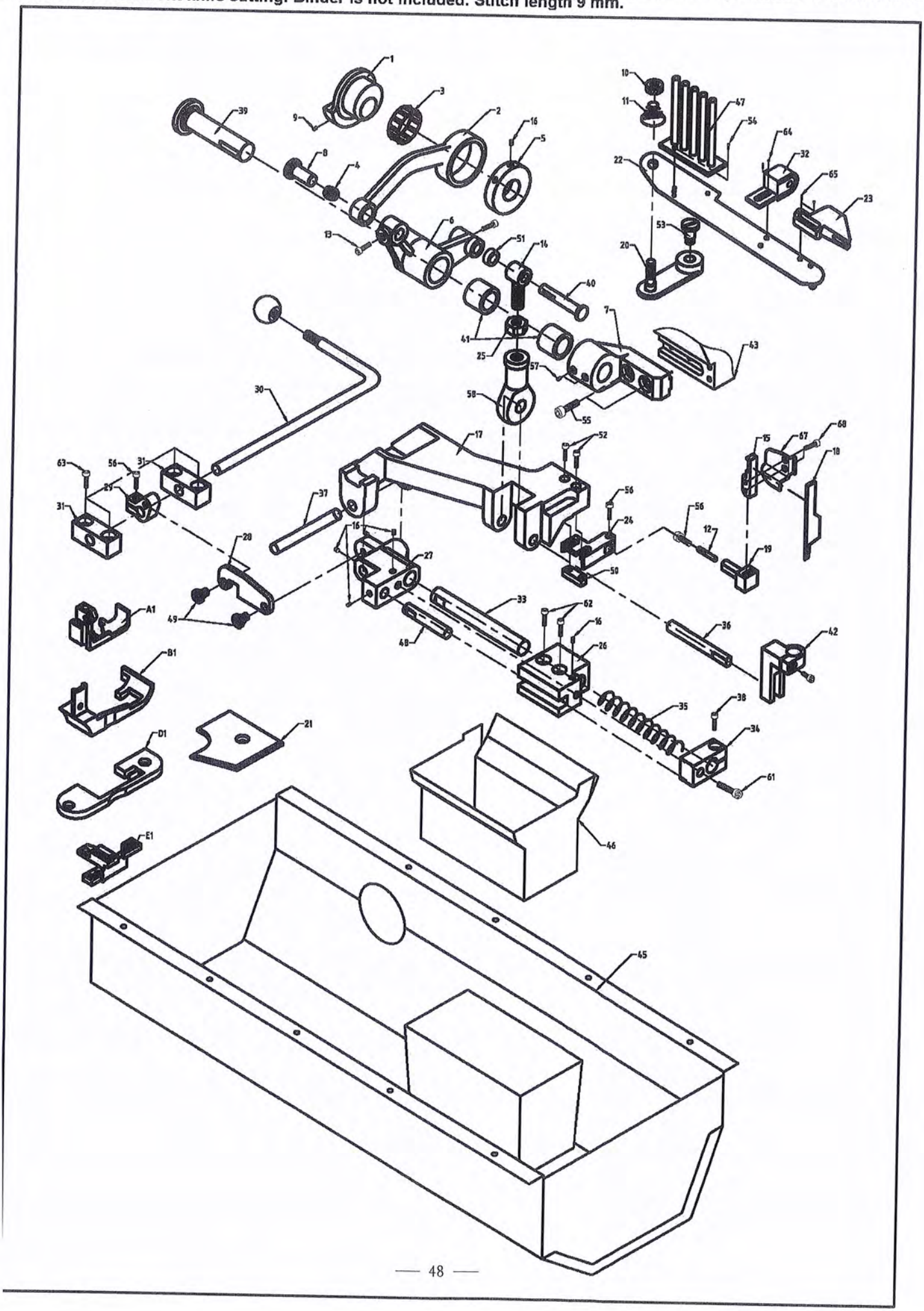

GLOBAL WF 1515 AE

46	AE46			1	
47	AE47			1	
48	AE48			1	
49	AE49			1	
50	AE50			1	
51	AE51			1	
52	AE52		M4X20	2	AE17
53	AE53			1	
54	AE54		M3X6	2	AE22
55	AE55		M8X16	2	
56	AE56		M4X12	2	AE19 29
57	AE57		M6X6	2	AE07
58	AE58		FJ11-8	1	AE14
59	AE59		SM11/64X8XT40	6	AE21 46
60	AE60		SM11/64X10XT40	3	AE17 42
61	AE61		M6X40	1	AE26
62	AE62		M6X25	2	AE26
63	AE63		M6X16	4	AE31
64	AE64		SM11/64X5XT40	2	AE17
65	AE65		M4X20	2	AE22
66	AE66		M4X8	2	AE22
67	AE67			1	
68	AE68		M4X6	2	
69	SBQ25M6			1	AE30
70	AEA1			1	
71	AEB1			1	
72	AED1			1	
73	AEE1			1	

GLOBAL WF 1515 LG-B

WF 1515 LG-B - Single needle walking foot machine with left hand vertical axis hook. Machine is most suitable for heavy binding work and has a movable binder. Binder is not included.

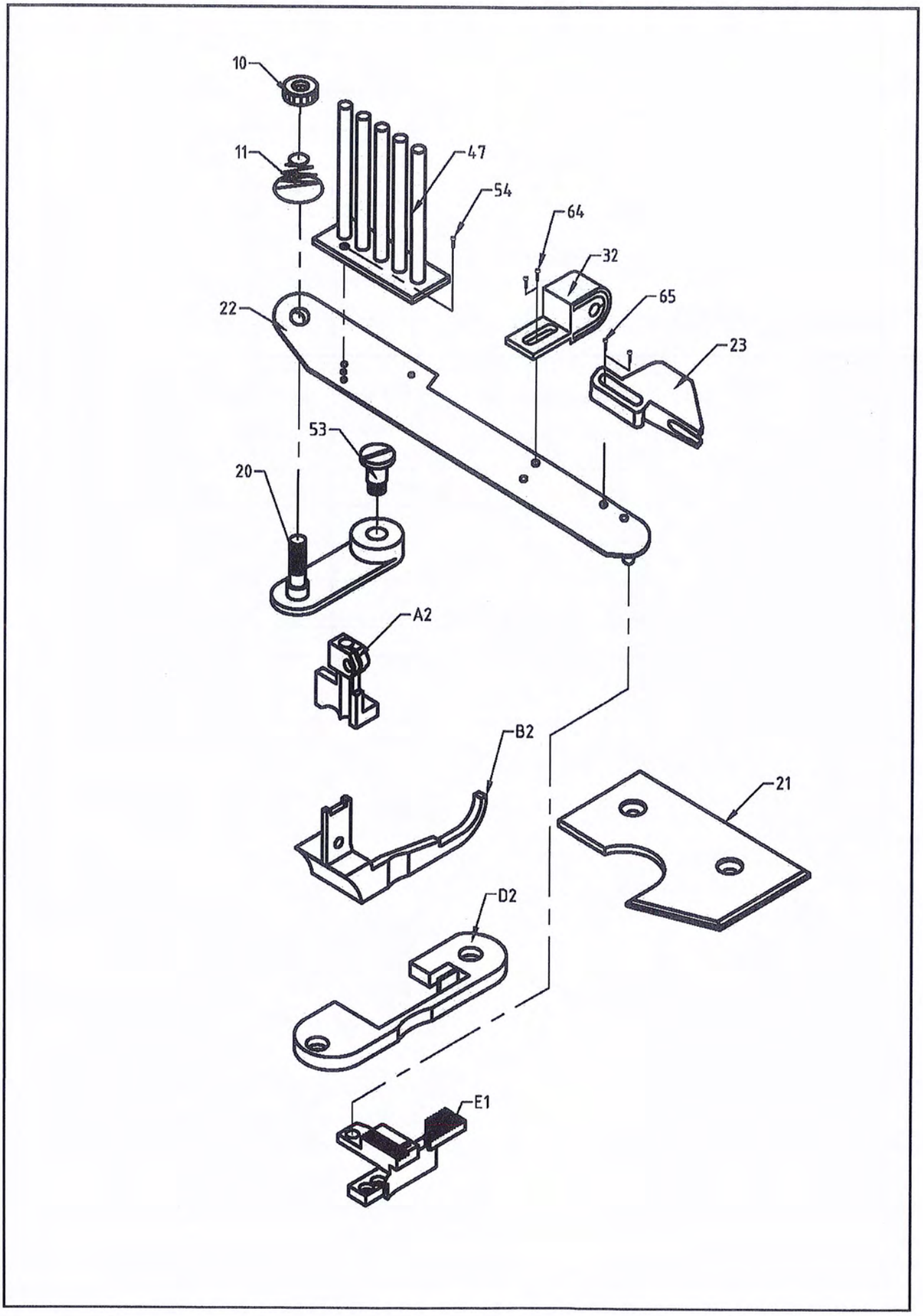

GLOBAL WF 1515 LG-B

1	AE10			1	
2	AE11			1	
3	AE20			1	
4	LG21			1	
5	AE22			1	
6	AE23			1	
7	AE32			1	
8	AE47			1	
9	AE53			1	
10	AE54		M3X6	2	AE22
11	AE65		M4X20	2	AE22
12	AE66		M4X8	2	AE22
13	LGA2			1	
14	LGB2			1	
15	LGD2			1	
16	AEE1			1	