GLOBAL

LP 1626-33-AUT

Spare Parts manual

www.globalsew.com

info@globalsew.com

目录（Parts book）

使用说明 1

1.机器简介（Brief Introduction） 2

2.主要技术规格（ Specification ） 2

3.安装（Assembling） 3

4.皮带张力的调整（Adjustment of belt tension） 3

5.皮带罩的安装（Assembling for belt cover） 4

6.加油（Oiling ） 4

7.机针的安装（Assembling for the needle） 5

8.底线的穿线方法（Threading for the buttom thread） 5

9.灯与开关 （lights and switchs） 6

10.绕底线（ Thread wrapping） 6

11.穿线（Threading） 7

12.线迹长度的调节（ Ajustment of stitch length） 7

13.线张力的调节（Tension adjustment） 8

14.压脚提升（16.Presser foot lifting） 8

15.压脚压力的调节（Adjustment for pressure of presser foot） 9

16.旋梭针座的调整（Adjustment for needle base of the hook） 9

17.安全装置的复位（Restoration for the safety） 10

18.分线钩的调节（Adjustment for stitch length） 10

19.针与旋梭的关系（Relation of needle and hook） 11

20.按钮的使用（Use of buttons） 12

21.缝制速度一览表（Sewing speed schedule） 13

22.缝制中出现的问题及处理方法（Problem and method） 13

目　　录(CATALOGUE)

零件手册 16

1. 外部装置(Frame & miscellaneous cover components) ---------- 17
2. 上轴及挑线装置（Upper shaft & balance components） ---------- 19
3. 针杆摆动机构 Needle bar rocking components ---------- 21
4. 压脚调节及上送料 Pressure adjusting & upper feed mechanism components --- 23
5(1). 送料机构 Feedmechanism components (1780L) ---------- 27
5(2). 送料机构 Feedmechanism components (1780-7) ---------- 31
6. 切线部分（THREAD CUTTING COMPONENTS)---------- 33
7. 下送料机构 Feed base components ---------- 35
8. 夹线器 Thread tension components ---------- 37
9. 绕线装置 Lower thread winder mechanism components ---------- 39
10. 下轴装置 Hook shaft & lower shaft components ---------- 41
11. 自动抬压脚装置 Automatic presser lifting mechanism conponents ---------- 43
12. 供气装置 Air mechanism components ---------- 44
13. 自动倒缝装置（选配）Automatis back components ---------- 45
14. DL装置(选配) DL mechanism components ---------- 46
15. 运油关系 Lubrication components ---------- 47
16. 运油关系 Lubrication components ---------- 48
17. 针板压脚部件 Gauge components (standard parts) ---------- 49
18. 油盆及护罩 Belt cover & oil reservoir components ---------- 50
19. 气管连接图 Tracheal connection graph---------- 51
20. CP组件---------- 52

使用说明

1. 机器简介

本机采用独特的三同步送料机构，使其爬坡性能优越，对厚料送布能力强，顺畅，线迹均匀，整齐，美观。采用大旋梭勾线，滑杆机构挑线，上下轴同步带传动，保证了该机高速低噪音的性能。

该产品广泛适用于汽车坐垫，沙发，皮包，帐篷等厚料的缝制。

1. Brief Introduction

The machine adopts three synchronous feeding and special feed dog construction to make the grade ability perform well. Therefore, the strong feeding ability for heavy duty material can sew smooth, average, neat and beautiful stitch. It adopts large hook, slider thread taking-up, upper and lower axis synchronous belt transmission, so that it make sure low noisy in high speed.

The machine is applied in the carseat mats, sofa, leather bags, tents and so on.

2. 主要技术规格

机型	1780-7	1780L
最高缝纫速度	2000s.p.m	1200s.p.m
最大线迹长度	9mm	12mm
针杆行程	38mm	
采用机针	DPX17（Nm125～Nm180）	
	标配Nm160(23#)	
润滑方式	油线供油（手动加油）	
采用旋梭	自动润滑大旋梭	
压脚高度	手动9mm,膝控16mm	
电动机功率750W	电动机功率750W	

2. Specification

Model	1780-7	1780L
Max sewing speed	2000spm	1200s.p.m
Max sitich length	9mm	12mm
Needle bar stroke	38mm	
Needle type	DPX17(Nm125～Nm180) Standard Nm160(23#)	
Lubrication	by oil line (manual oiling)	
Hook	Self-lubricating hook	
Presser foot height	Manual 9mm	
	Knee control 16mm	
Motor power	750W	

3. 安装（见图1）

1）机壳台板连接勾座、机壳橡皮垫等的安装

用钉②把附属的连接勾座①、机壳橡皮垫②固定到台板上。

2)油盘的安装

用8个木螺丝按图示位置把油盘③固定到台板上。

3. Assembling (Picture 1)

1)Assembling for connector of machine head and table, machine head rubber mats, and so on.
Connect the screw 2 to the hookbase 1, and the rubber mat 2 fix on the table.
2)Assembling for oil tray .
Fix the oil tray 3 on the table as the showwing position by eight wood screws.

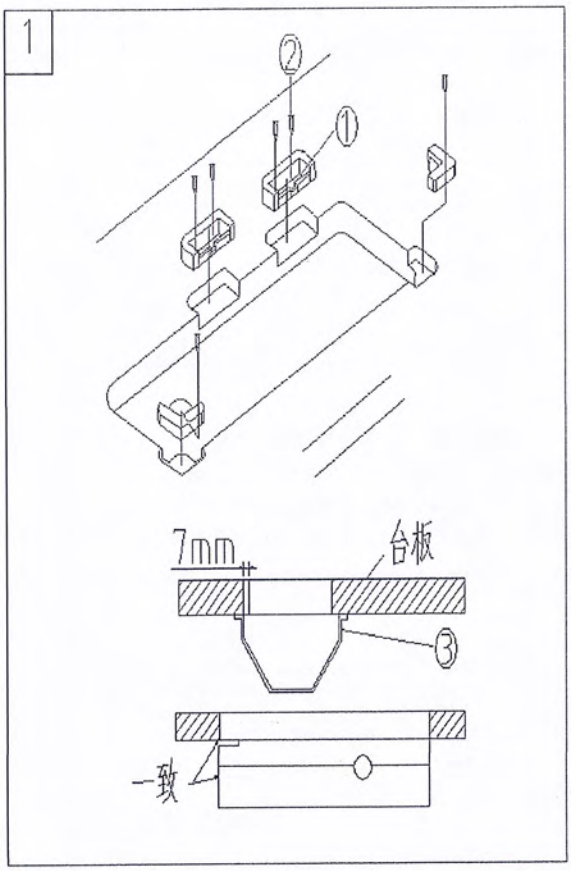

4. 皮带张力的调整（见图2）

调整皮带张力时，请移动马达的高度，用9.8N的力量按压皮带中间，此时的松驰量应为15mm。

注意：调整前先关闭电源，确认马达停止转动后再进行。

4. Adjustment of belt tension

To adjust the belt tension, please move the motor height, and use the pressing power 9.8N to press at the middle of the belt, then the looseness amount would be 15mm.

Remark: please close the power before adjustment, make sure the motor stop running.

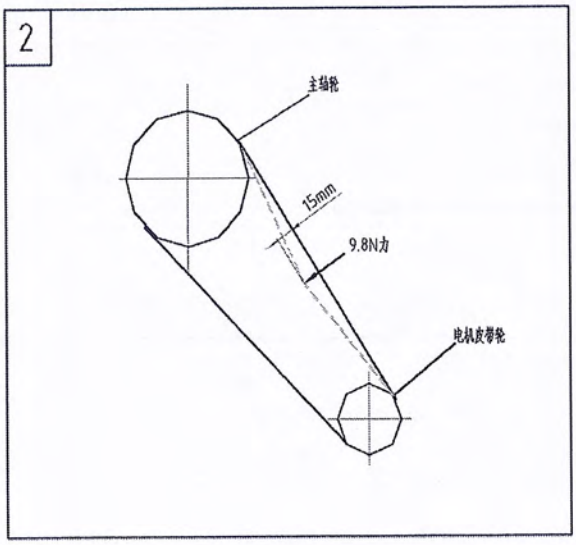

5.皮带罩的安装（见图3）

1）用固定螺丝②⑥把皮带罩（右）①安装到头上。

2）把皮带罩（左）③镶到皮带罩（右）①的爪部AB上。

3）用固定螺丝④⑤固定好皮带罩（左）③。

5.Assembling for belt cover

1)Use the fixing screw 2 and 6 to fix the belt cover (right) 1on the machine head.
2)Put the belt cover (left) 3 on the AB part of belt cover (right) 1.

3)Fix the screw 4and5 to the belt cover (left) 3.
Remark: when finishing assembling, please confirm the belt cover can not touch the belt and main wheel.

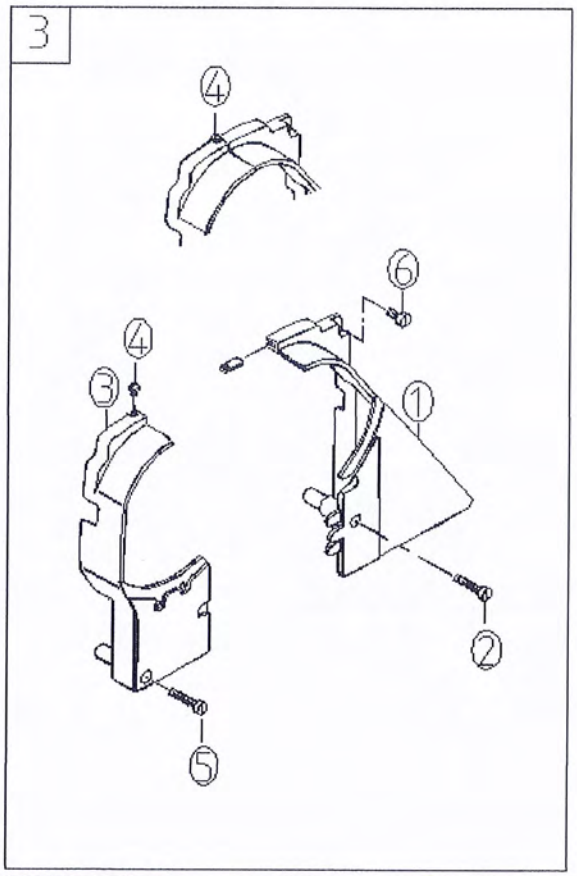

6.加油

（1）.面部加油（见图4）

1）拧下面板螺钉；

2）拿下面板；

3）每日在箭头指示的部位加适量的油；

4）装上面板；

5）拧紧螺钉。

6.Oiling

1) oiling for the front of machine head. (Picture 4)

A. Wreast the cover screw.

B.Remove the cover .

C.Oiling properly as the direction everyday.

D.Close the cover.

E.Wrest and tight the screw.

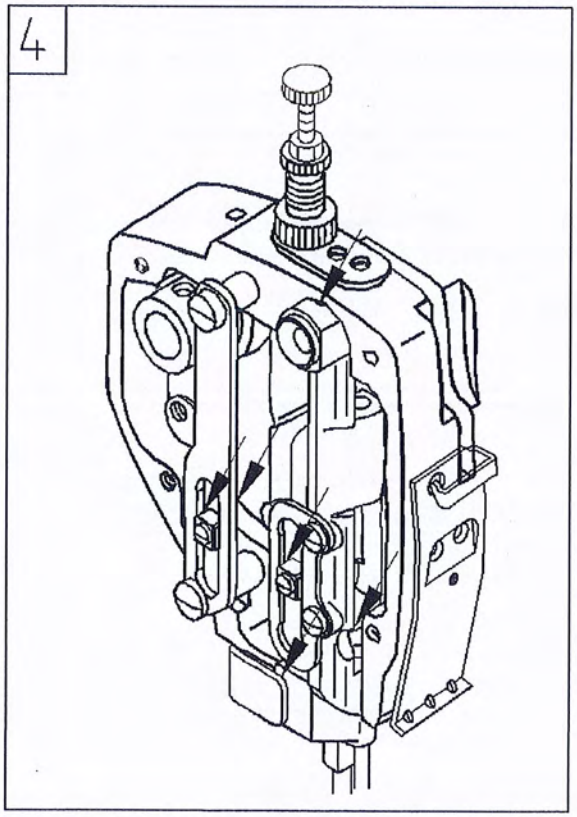

（2）.机身加油（见图5）

1）每天按箭头指示的部位加适量的油

2）初次运转前或长时间没有使用时，请在箭头指示的部位加油外，另需卸下顶盖1，向各毛毡和油线加适量的油

3）C为加油和油面观测孔

2) Oiling for machine head (Picture 5)

A. Oiling properly as the direction everyday.

B. For first running or non-use for long time, please add the oil as the direction and remove the cover 2 to add proper oil on each felt and oil line.

C. C is oil superinduce and suface observation oil box

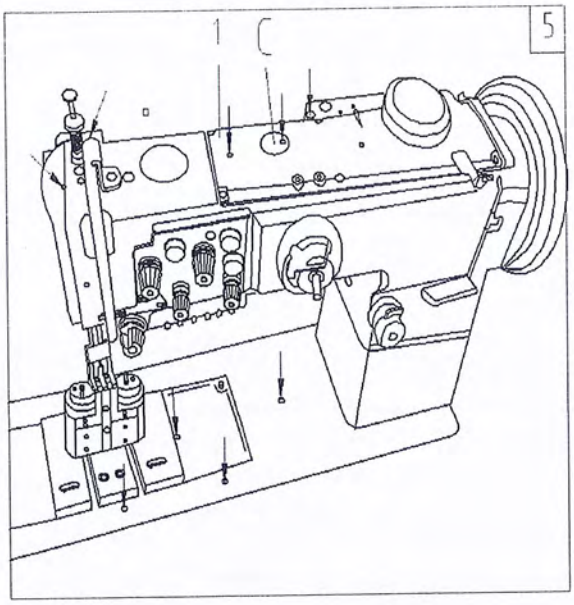

7.机针的安装（见图7）

1）转动主动轮，把针杆上升到量高位置：

2）拧松机针固定螺丝①，让右侧机针②的长槽朝向左，左侧的长槽向右；

3）把机针插到最里面；

4）拧紧机针固定螺丝①。

7. Assembling for the needle (Picture 7)

1) Run the main wheel and lift the needle bar to the highest position

2) Loose the needle screw 1, and make the right side long slot of needle 2 direct at the left side, opposite end.

3) Put the needle in it.

4) wrest the needle and fix the screw 1.

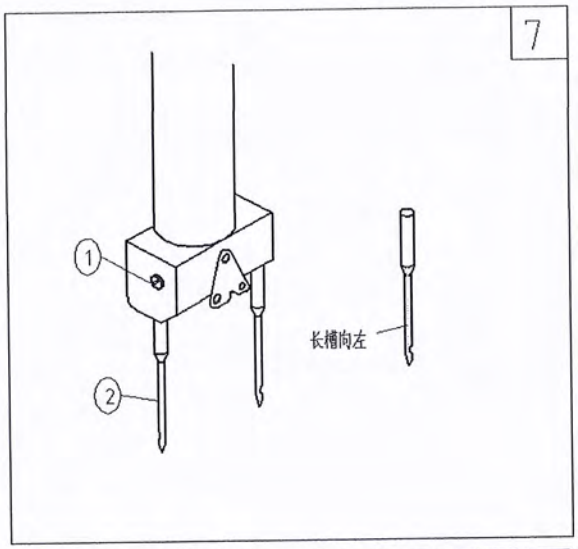

8.底线的穿线方法（见图8）

1）扳起旋梭的拔片①，取梭芯；

2）装入时，正确地插入旋梭轴，然后放倒拔片；

3）把线嵌入旋梭穿线槽②，再从突起部③的下面穿过去，然后穿进线张力弹簧；

4）拉底线之后，梭芯沿箭头方向旋转。

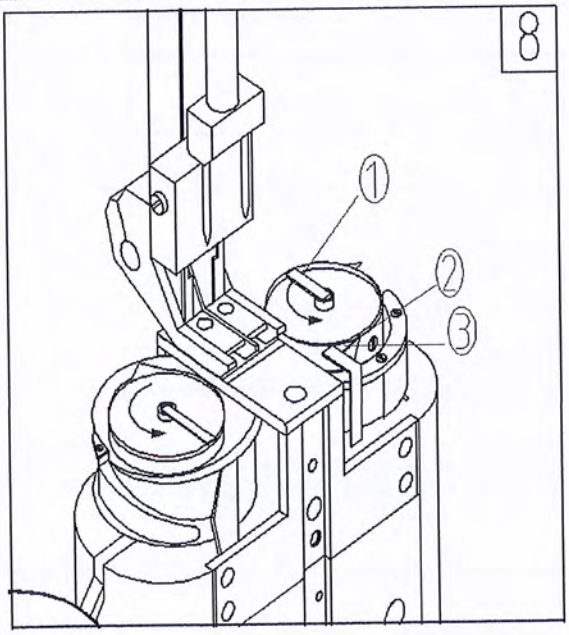

8. Threading for the buttom thread (Picture 8)

1)Pull the plectrum 1 of hook, and take out the bobbin.

2) When putting inside, insert correctly into the hook shaft, and put down the plectrum.

3)Inlay the thread to the threading slot 2, and put through the part 3, then pull into the tension spring.

4)Pull the buttom thread and the bobbin should be run as the direction in the picture.

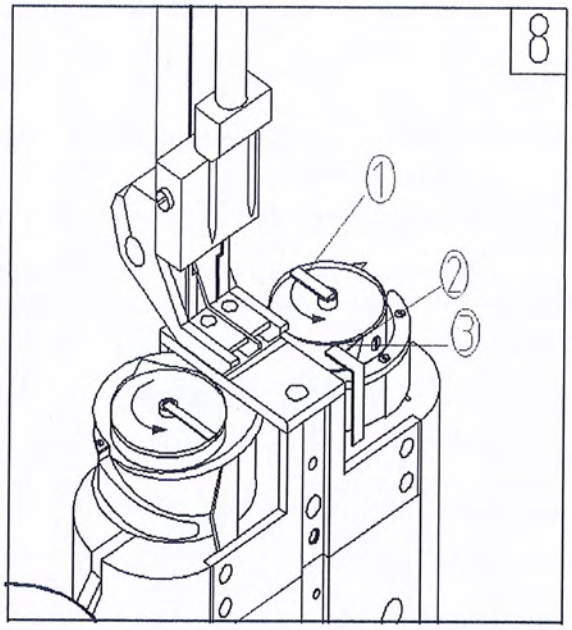

9.灯与开关（见图9）

左右推动开关键①控制灯的开与关

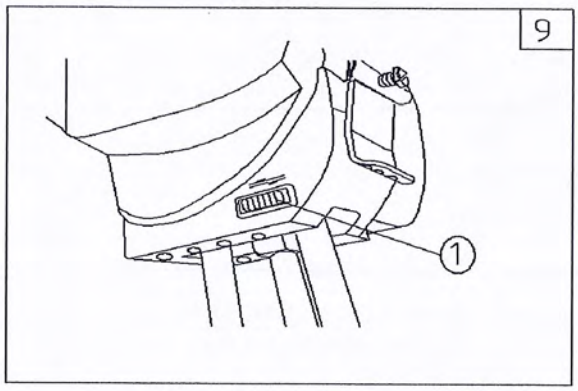

9.Lights and switches

Push the switch on and off

10.绕底线（见图10）

1）按①～③的顺序穿线，然后拿着线头从下往上将线纳入刀口切断，新线头压在刀下。

2）装上梭芯，掀倒绕线杆A。

3）拧松固定螺钉B，调整调节板直到让线绕到80%左右的位置。

4）绕线偏时，前后移动绕线导向器C进行调整，再用固定螺钉D固定。

5）绕线结束后，绕线杆分离，自动停止。拨出线芯，然后将线从下往上纳入刀口切断，新线头压在刀下。

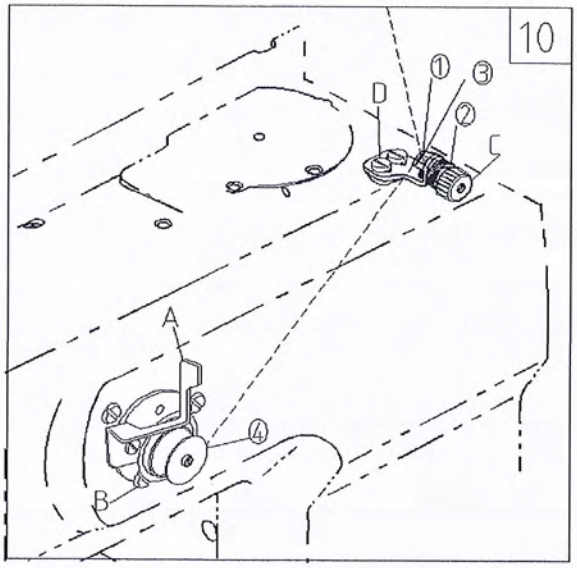

10. Thread wrapping (Picture 10)

1) Threading in the sequence frim 1 to 3, and circle around the bobbin.

2)Put down the bobbin winder A.

3)Loose the screw B, asjust the plate to the 80% position.

4)When it's leaning, move the thread guide C and adjust in the front and back, then fix the screw D again.

5)Finish wrapping and remove the bobbin winder,it wwill stop automatically.

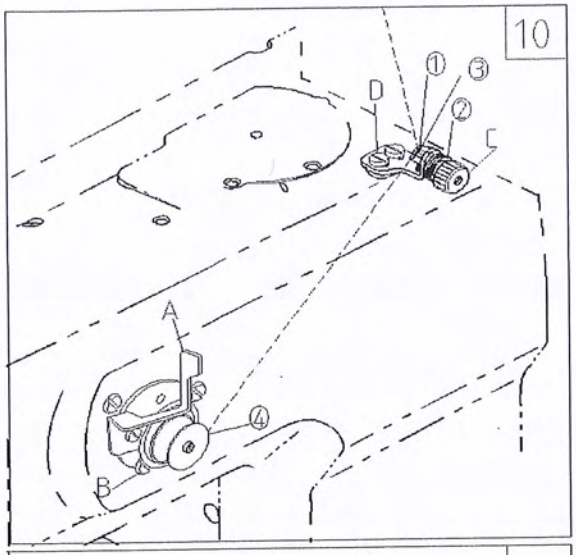

11.穿线（见图11）

按图示顺序穿线即可

11. Threading(Picture 11)

Threading as the sequence in the picture.

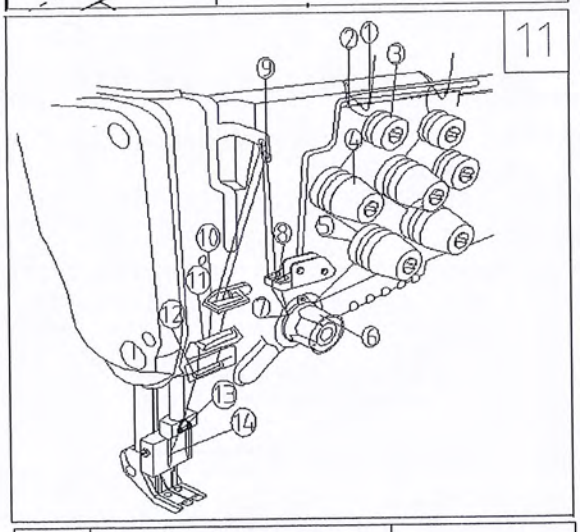

12.线迹长度的调节（见图12）

把送布调节盘①向左转动，让调节器标记对准需要的数字即可；

向下按下倒缝扳手②即可开始倒缝，放开恢复正常缝纫。

12. Ajustment of stitch length (12)

Turn the feeding adjustment tray 1 to left (right) side, make the mark on the necessary No.

Press down the bartacking handle 2 to start reverse sewing. when loose it, you can finish normal sewing.

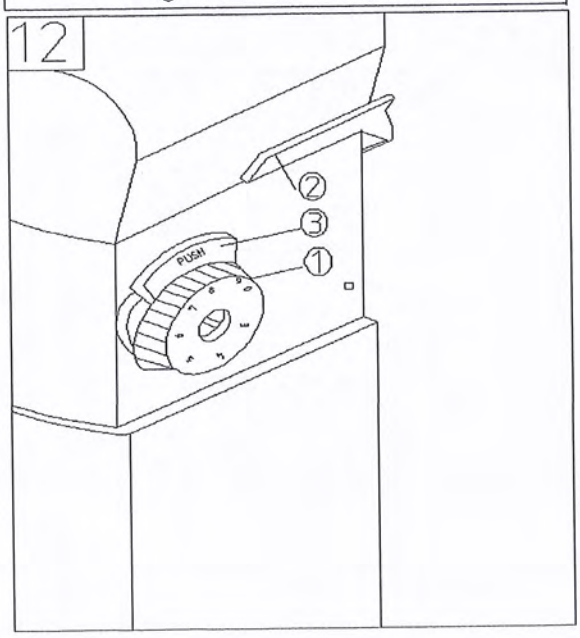

13.线张力的调节

1）上线张力的调节（见图13）
顺时钟方向转动线张力螺母①，上线张力变强；
逆时钟方向转动张力变弱。
2）底线张力的调节（见图14）
顺时钟方向转动线张力螺钉②，底线张力变强；
逆时钟方向转动张力变弱。

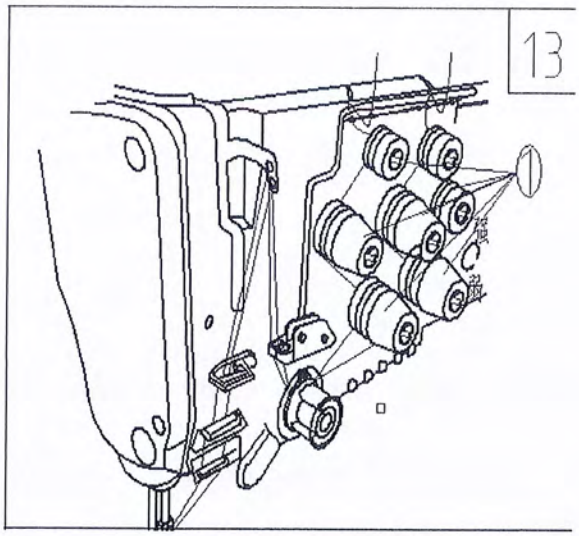

13. Tension adjustment

1) Upper Tension adjustment (Picture 13).

Turn the tension nut 1 at clockwise direction, the upper tension will stronger; at the anticlockwise direction, the tension will weaker.

2) Bottom tension adjustment (Picture 14)

Turn the tension screw 2 at the clockwise direction, the bottom tension will be stronger; at the anticlockwise direction, the tension will be weaker.

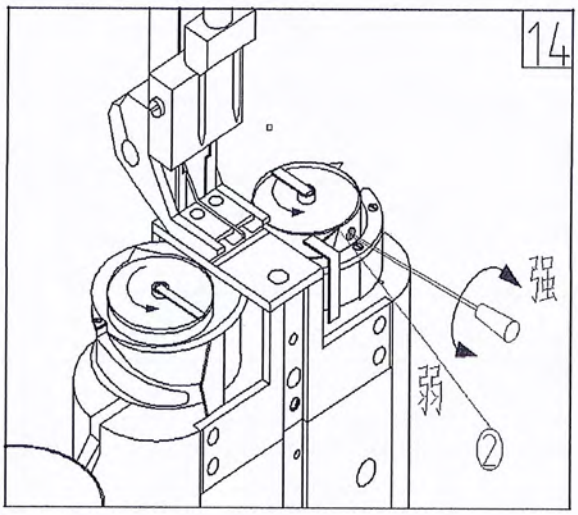

14.压脚提升（见图15）

1）让压脚在上升的位置停止时，把抬压脚扳手①向箭头方向抬起，压脚上升9mm后停止；

2)下降压脚时，放下抬压脚扳手，即返回原来位置。

14.Presser foot lifting (Picture 15)

1.Keep the presser foot at the lifting pisition and lift up the bar 1 at the direction in the picture, then the presser foot would lift up 9mm and stop.

2.When put down the presser foot, then let the presser handle down. It would return the original position.

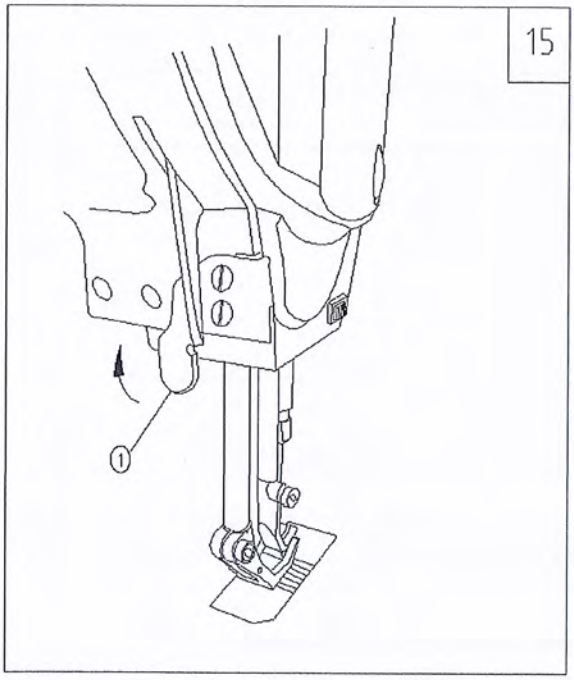

15. 压脚压力的调节（见图16）

1） 顺时针转动压脚调节螺钉③压力变强，逆时针转动压力变弱。调节后拧紧固定螺母④。

2）微调压脚压力： 顺时针转动压脚调节螺钉①压力变强，逆时针转动压力变弱。调节后拧紧固定螺母②。微调可使压脚压力更精准。

15. Adjustment for pressure of presser foot (Picture16)

A. Turn the screw 3 at right side, the pressure would be stronger, turn left would be weaker. After adjusting, tight the fixing nut 4.

B. Fine tune: Turn the screw 2 at right side, the pressure would be stronger, turn left would be weaker. tight the fixing nut1

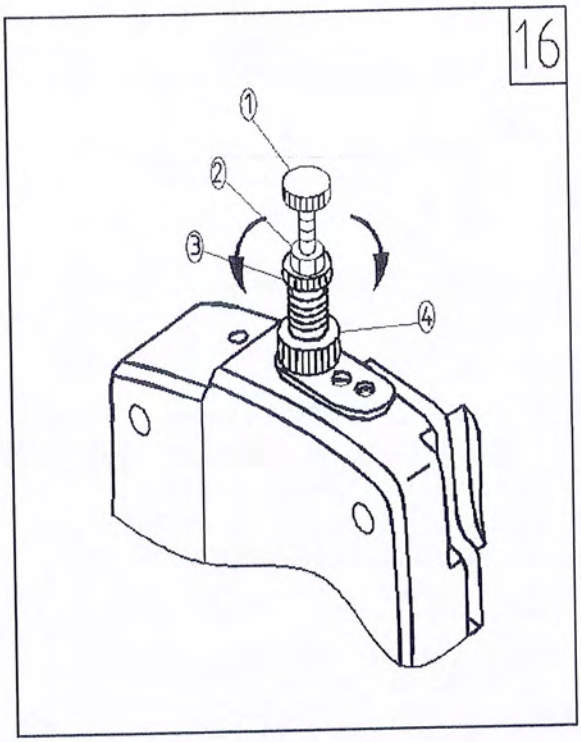

16. 旋梭针座的调整（见图17）

更换了旋梭之后，请确认针座位置。标准位置时，旋梭针座②顶到机针①侧面，离机针0.1～0.2mm的状态。如果不正确，请弯曲旋梭针座进行调节。

1）旋梭针座往内侧弯曲时，把螺丝刀插到旋梭针座的外侧。

2）旋梭针座往外侧弯曲时，把螺丝刀插到旋梭针座的内侧。

16. Adjustment for needle base of the hook (Picture 17)

After changing the hook, please the position of the needle base. When in the standard position, needle base 2 touch the side of needle, near the needle about 0.1-0.2mm. If it's not correct, please make the needle base to curve and adjust.

1) Needle base is curve inside, insert the screwdriver into the outside of needle base.

2) Needle base is curve outside, insert the screwdriver into the inner side of needle base.

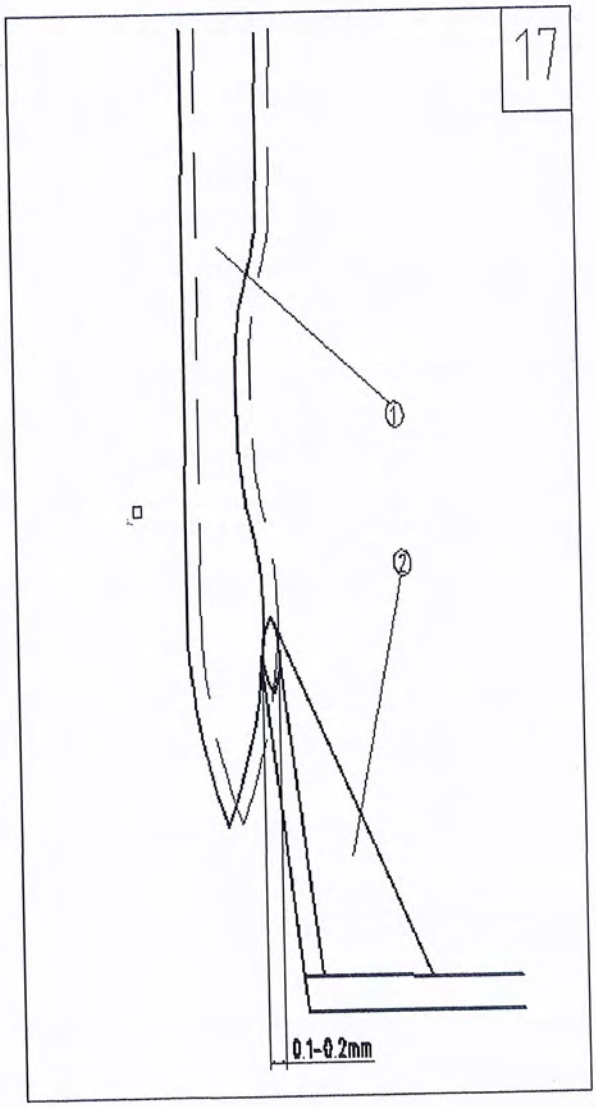

17. 安全装置的复位（见图18）

缝制中，如果向旋梭等施加过大的力，安全装置就启动。这时转动主动轮旋梭也不转动，安全装置启动之后，请先排除故障原因，再进行复位。

1）按住机头上面的按钮①，用力反转主动轮；

2）听到“喀嚓”的声音之后，复位完成。

注意：完成后用手转动主动轮，确认按钮是否复位。

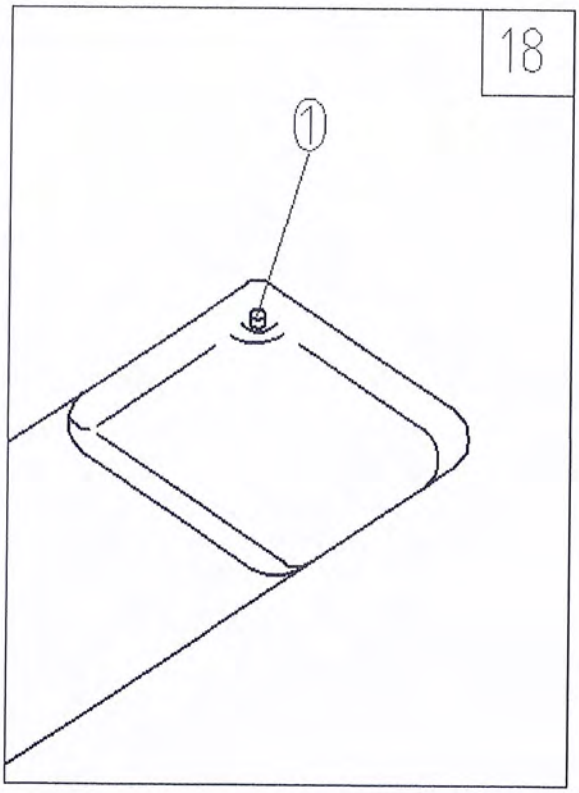

17. Restoration for the safety device(Picture18)

During the sewing, the safety device will start when the hook get over pressure. Then the moving wheel hook will not work. After opening the safety device, please exclude the broken reasons and do the restoration.

1)Press down the button 1 of the machine head, and reverse the main wheel.

2) After the voice, restoration would be finished.

Remark: Turn the wheel by hand while finish, to make sure button 1 to be restoration.

18. 分线钩的调节（见图19）

1）向正常方向转动主动轮，把分线钩①移送到最后位置。

2）向箭头方向转动②，把中旋梭止动器③顶到针板④的沟。

3）拧松中导向器固定螺丝⑤，把中旋梭导向器和梭壳的突起部A之间的间隙调整为0.1～0.3mm。

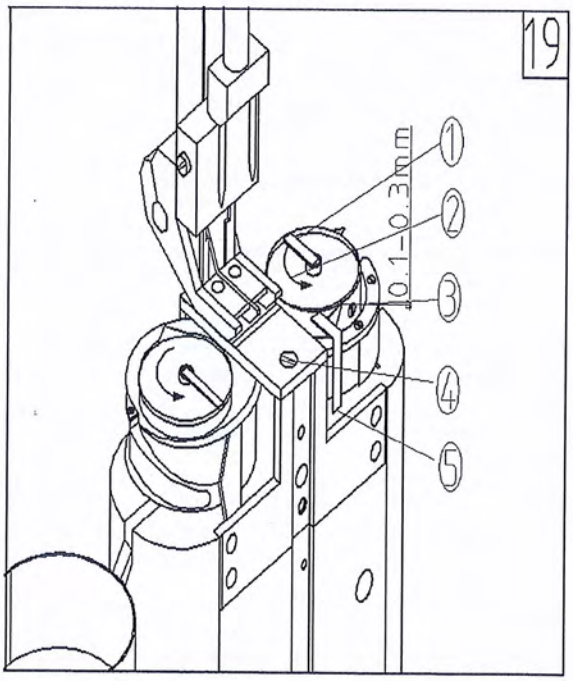

18. Adjustment for stitch length (Picture 19)

1) Turm the main wheel at the normal direction, move the hook guide 1 to the last position.

2) Turn 2 at the direction in the picture, let the stopping part 3 touch the needl slot.

3)Loose the screw 5, adjust the distance to be 0.1-0.3mm between hook guide and bobbin case part A.

19.针与旋梭的关系（见图20）

1）把针距调节旋钮调整到0；

2）转动主动轮，从针杆最下点上升2.3mm后，拧松针杆接头螺丝①，把机针②的针孔上端到梭尖③的距离调整成1.5mm，然后再拧紧。

3）转动主动轮，把针杆从最下点上升2.3mm,把旋梭尖③和机针②的中心调整的一致，然后拧紧2个齿轮（小）的固定螺丝④。

4）在旋梭尖③和机针②中心基本一致的位置，拧松旋梭轴台的固定螺丝⑥，左右移动旋梭轴台。把旋梭尖和机针的间隙调整为0.05～0.1mm，然后拧紧固定螺丝⑥。

5）拧松2个齿轮（大）的固定螺丝⑤，左右移动齿轮（大），把梭尖③机针②的中心调整为一致，然后拧紧固定螺丝⑤，把2个固定螺丝⑤中的第一螺丝对准下轴的平部，然后拧紧。

19. Relation of needle and hook (Picture 20)

1) Adjusst the stitch length adjusting dial to be 0.

2)Turn the main wheel, lift up 2.3mm from the lowest position of needle bar.Loose the needle bar connector screw 1, adjust the distance to be 1.5mm between the end of needle 2 hole to the end of hook 3, then tight it

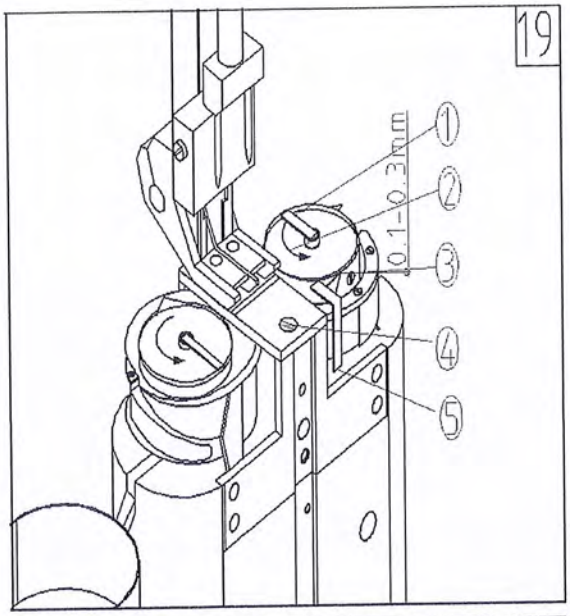

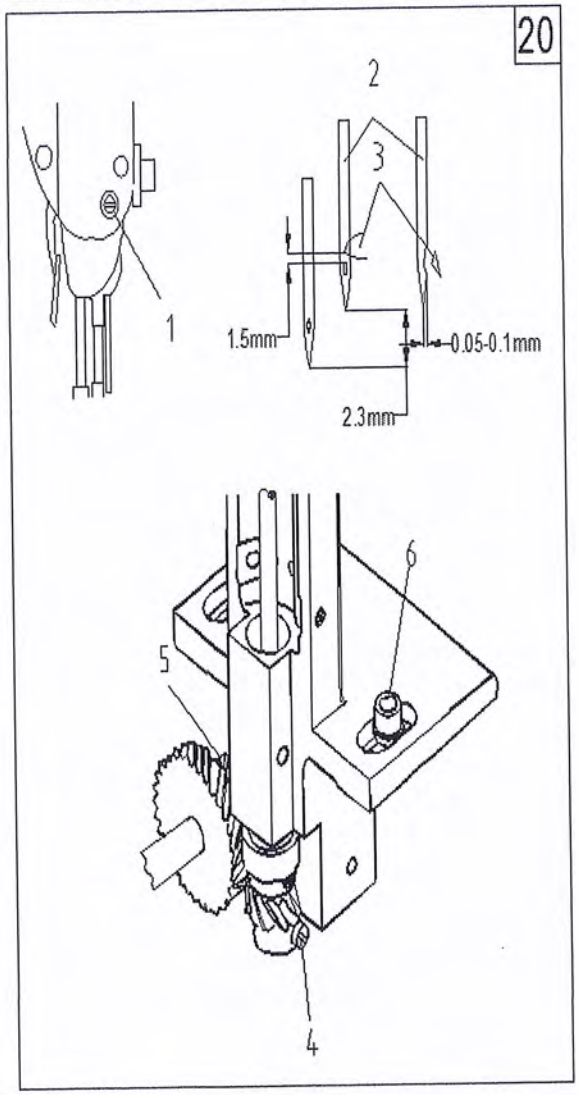

3)Turn the main wheel, lift up 2.3mm from the lowest position of the needle bar. Keep the hook end 3 and the center of needle 2 to be accordance, then tight two screw 4 of the needle bar (little).

4)When the hook end 3 and the center of needle 2 in the accordance position, loose the screw 6 of the hook shaft, move the shaft at left or right side, make the distance to be 0.05-0.1mm, and tight tht screw 6.

5)Loose two screws 5 of the wheel gear (big), move it at lest and right side. Keep the hook end 3 and the center of needle 2 to be accordance, then tight screw 5. Fix the first screw of the two screws 5, and align on the flat part of the bottom shaft, then tight it

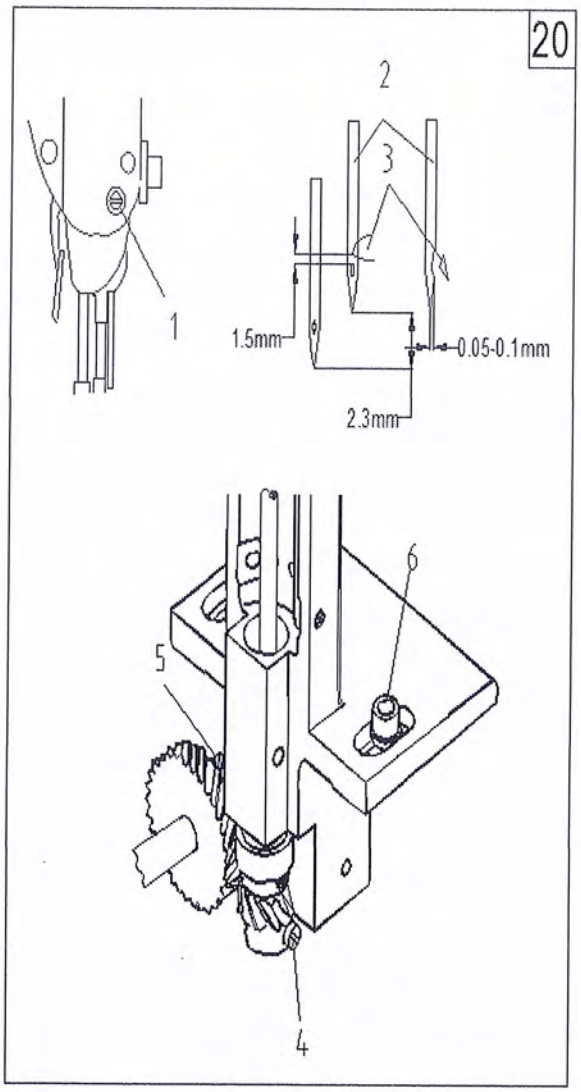

20.按钮的使用（见图21）

①--倒缝开始；　②--倒缝关闭；　③--DL；
④--补针；　⑤--第二松线；　⑥--中分。

1)直接分别按①②③④⑤⑥按键，可实现上述功能；

2)长按A处①②③④⑤⑥按键下对应的一个按钮，直致B处灯闪烁，松手，则C按钮成为该按键的快捷键。

20.Use of buttons (Picture 21)

1) Key function: ①: Reverse suture; ②: Reverse closing; ③: DL; ④: Fill needle; ⑤: Second loose line; ⑥: Middle separation

2) long press one button at A the ①②③④⑤⑥ button under the corresponding button, until the B lights flashing, let go, C become the key of the shortcut button.

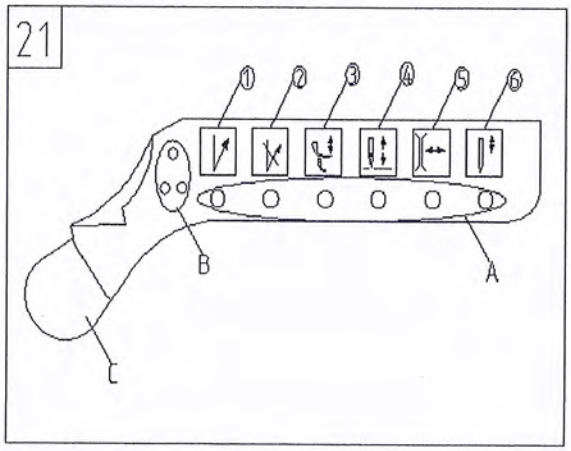

21. 缝制速度一览表

交替上下量	速度(1780-7)	速度(1780L)
～2mm	2000rpm	1200rpm
2～3mm	2000rpm	1200rpm
3～5mm	1600rpm	1000rpm
5～6.5mm	1300rpm	800rpm

根据不同条件设定最高转速，请不要超过设定值。

21. Sewing speed schedule

alternation amount	speed(1780-7)	speed(1780L)
～2mm	2000rpm	1200rpm
2～3mm	2000rpm	1200rpm
3～5mm	1600rpm	1000rpm
5～6.5mm	1300rpm	800rpm

The highest sewing speed is set in different condition, please do not over the setting.

22. 缝制中出现的问题及处理方法

现象	原因	处理方法
1. 断线 （布背面上线残留5～mm）	①线道，针尖，旋梭尖，针板的旋梭内圈固定钩有伤痕； ②上线张力过强； ③机针与旋梭尖相碰； ④旋梭部位油量少； ⑤上线张力过弱； ⑥挑线弹簧过强，移送量小； ⑦针与旋梭同步过快或过慢；	用细砂纸打磨旋梭尖的伤痕，用锉刀锉针板的旋梭内圈固定汇率钩。 调节上线张力。 参照（21. 针与旋梭的关系）。 调整油量（参照7. 加油）。 调节上线张力。 减弱挑线弹簧，加大移动量。 参照（21. 针与旋梭的关系）。
2. 跳线	①针与旋梭同步过快或过慢； ②压脚压力过弱 ； ③针孔上端和旋梭尖的间隙不正确； ④机针号不对；	参照（21. 针与旋梭的关系）。 拧紧压脚调节螺丝 参照（21. 针与旋梭的关系） 更换为大一号的机针。
3. 紧线不良	①梭壳的线张力弹簧下没有穿底线； ②线道加工不好； ③梭芯不滑动； ④底线张力过弱； ⑤底线张力过强； ⑥针尖损伤；	参照（10. 底线的穿线方法）。 用细砂纸打磨或用锉刀锉。 更换梭芯或旋梭。 加强底线张力。 减弱底线绕线张力。 更换机针。

22. Problem and method		
Situation	Reason	Method
1) thread broken (left 2-3mm at the back of material)	1)There is scar from thread way, needle end, hook end and the hook inside circle	1)Use the emery paper to deal with scar. Use the files to deal with the inside circle of hook.
	2)Upper thread tension is strong.	2)Make the upper thread weaker.
	3)Needle touch the hook end	3)Please check No. 22 the relation between needle and hook
	Oil amount of hook is small	4)Adjust the oil amount (as per No. 7 oiling).
	5)Upper thread tension is too weak.	5)Increase the upper thread tension .
	6)Taking-up spring is too strong, the movement amount is too small.	6)Make the taking-up spring weaker, enlarge the movement amount.
	7)Needle and hook run at the same time are too fast or too slow.	7)As per No. 22 the relation between needle and hook.
2) thread jumping	1)Needle and hook run at the same time are too fast or too slow.	1) As per No. 22 the relation between needle and hook.
	2) The pressure of presser foot is too weak.	2)Tight the presser foot adjusting screw.
	3)the distance between needle hole and hook end is not correct.	3)As per No. 22 the relation between needle and hook.
	4)Neeld type is not correct	4)Change another large needle.
3) tight thread	1)The tension spring of bobbin case have no	1)The tension spring of bobbin case have no threading.
	2)Processing of thread way is not good.	2)Processing of thread way is not good.
	3)The bobbin can not slide	3)The bobbin can not slide .
	4)Bottom thread is too weak	4)Bottom thread is too weak .
	5)Bottom thread is too	5)Bottom thread is too strong.
	6)Needle end damage .	6)Needle end damage.

零件手册

1、外部装置（FRAME & MISCELLANEOUS COVER COMPONENTS）

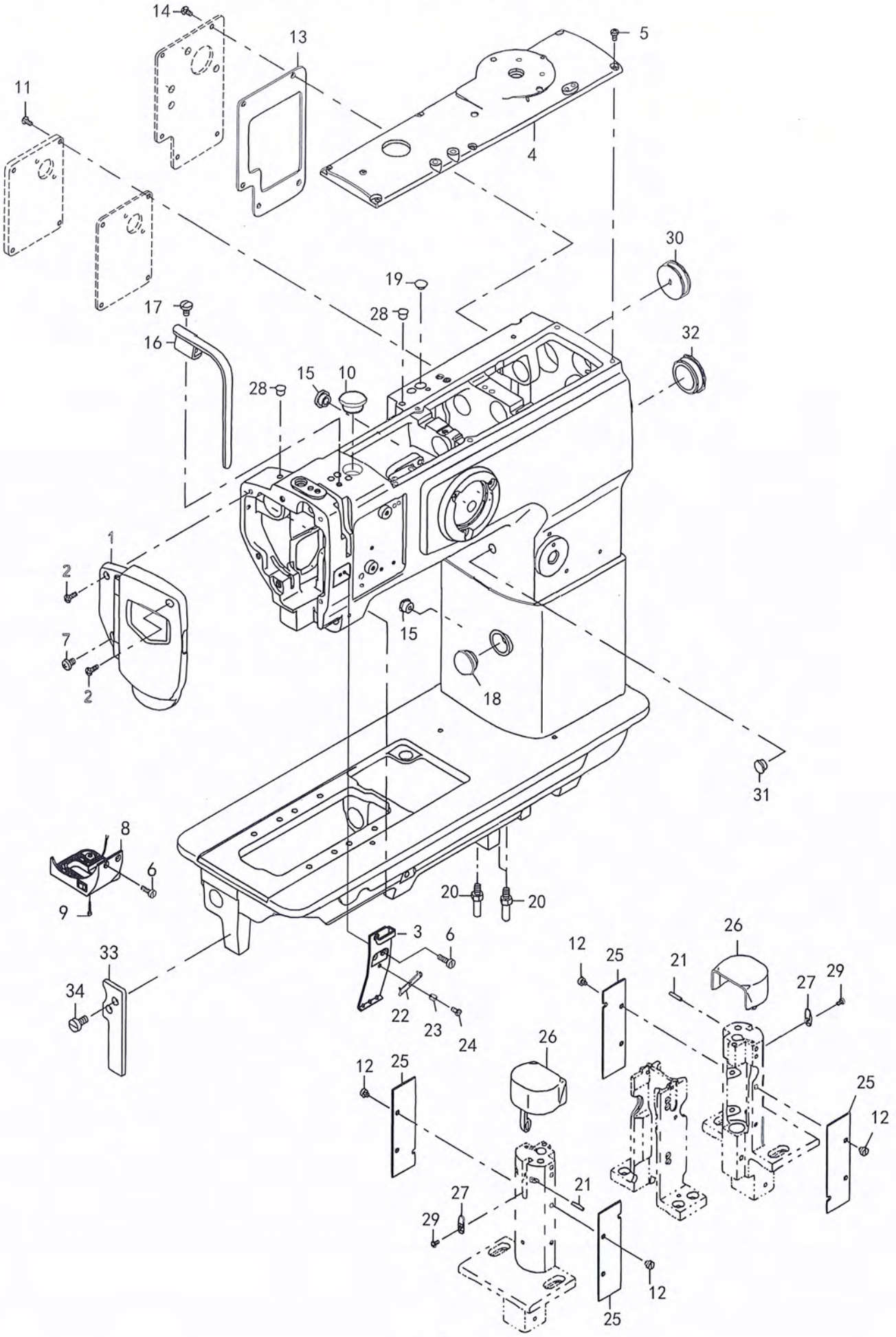

序号	说明	编码及型号	英文名称	中文名称	数量
1		40016798	FACE PLATE ASM.	面板	1
2		SS4111215SP	SCREW 11/64-40 L=12	螺钉11/64-40 L=12	2
3		20182	POSSING PLATE	过线板	1
4		21331301	TOP COVER B	顶盖	1
5		SS4110815SP	SCREW 11/64-40 L=8	螺钉11/64-40 L=8	6
6		SS2090610TP	SCREW 9/64-40 L=7.2	辅助板螺钉	4
7		SS4150915SP	SCREW 15/64-28 L=9	螺钉	1
8		020186	Lighting assembly	照明组件	1
9		SS6091022TP	SCREW	针杆架限位板螺钉	2
10		020181	CAP	橡皮塞	2
11		SS4110815SP	SCREW 11/64-40 L=8	螺钉11/64-40 L=8	4
12		SS6110480SP	SCREW 11/64-40 L=4.3	螺丝	8
13		21332002	WINDOW PLATE PACKING B	窗盖板B垫	1
14		SS4110815SP	SCREW 11/64-40 L=8	螺钉11/64-40 L=8	5
15		TA1100604R0	PLUG	胶塞	1
16		21331608	BALANCE COVER	天平盖	1
17		SS7150910TP	SCREW 15/64-28 L=9	螺钉15/64-28 L=9	1
18		TA2100904R0	RUBBER PLUG	胶塞	1
19		TA1250504R0	RUBBER PLUG	橡皮塞	1
20		22602601	BED SCREW STUD	底板支撑螺钉	2
21		40038691	HOOK COVER HINGE SHAFT	床盖销	2
22		17912106	NEEDLE THREAD PRESSER PLATE	面线压板	1
23		B1132521000	THREAD PRESSER PLATE SPRING	压板弹簧	1
24		SD0380551SL	HINGE SCREW D=3.80 H=5.5	铰链螺钉D=3.80 H=5.5	1
25		40017316	HOOK SHAFT SADDLE COVER	防护板	4
26		40038688	HOOK COVER ASM.	旋梭盖	1
27		40017269	SLIDE PLATE	调节片	1
28		TA0750704R0	RUBBER PLUG	橡皮塞	2
29		SS4080620TP	SCREW 1/8-44 L=6	螺钉1/8-44L=6	1
30		10201200	RUBBER PLUG	橡皮塞	1
31		TA1050504R0	RUBBER PLUG	橡皮塞	1
32		22619100	CAP	橡皮塞	1
33		21361407	BED SUPPORT PLATE	底板支撑板	1
34		SS6151210SP	SCREW 15/64-28 L=12	底板支撑板螺钉	2

2. 上轴及挑线装置（Upper shaft & balance components）

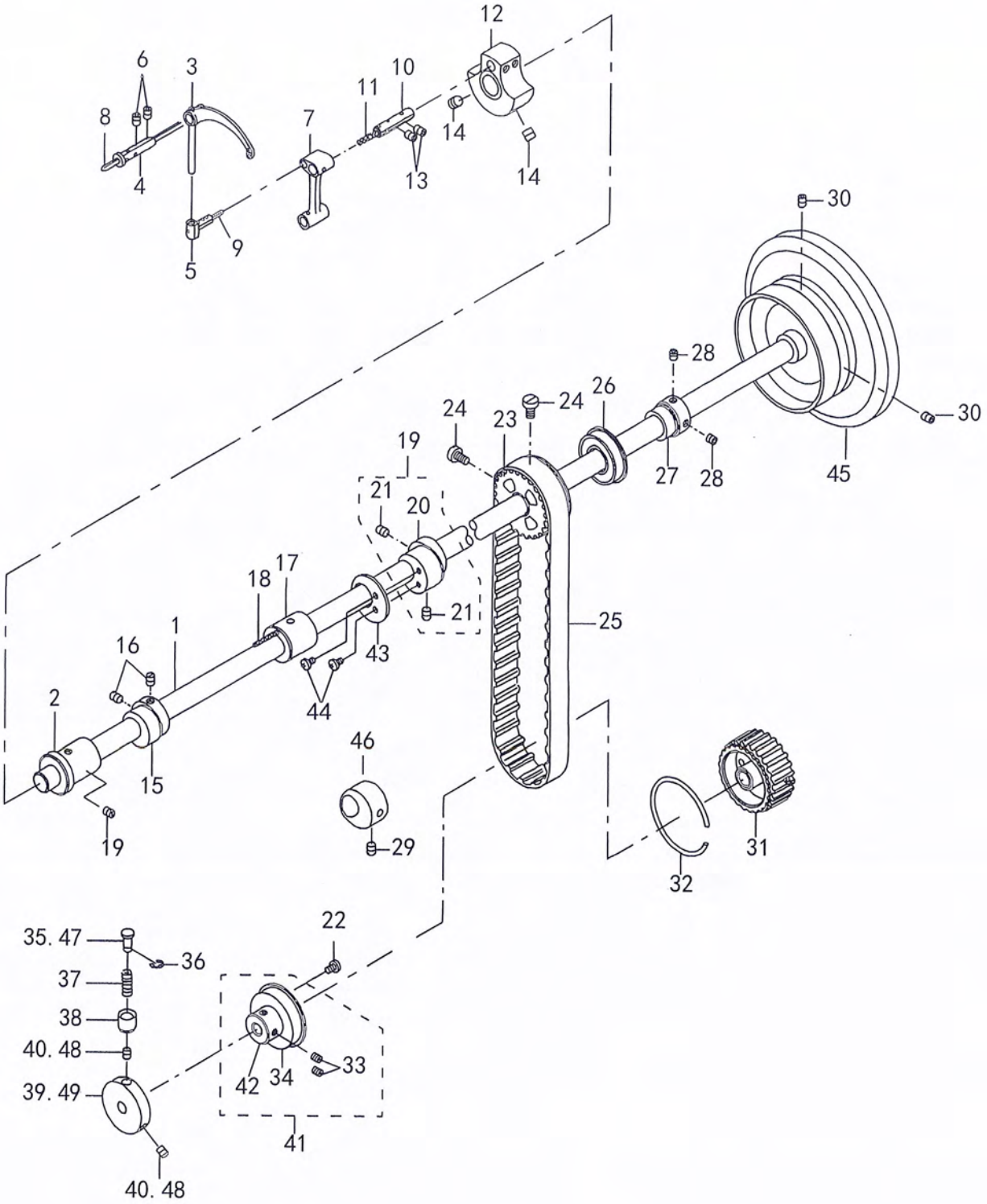

序号	说明	编码及型号	英文名称	中文名称	数量
1		020267	UPPER SHAFT	上轴	1
2		21333000	UPPER SHAFT FRONT METAL	上轴左轴套	1
3		B1905520000	THREAD TAKE-UP LEVER	挑线杆	1
4		B1906051000	TAKE-UP LEVER PIN	挑线杆销	1
5		B1907057000	THRUST PIN	挑线杆滑块	1
6		SS8150822TP	SCREW 15/64-28 L=8	挑线杆销螺钉	1
7		21339106	NEEDLE BAR CRANK ROD	针杆曲柄连杆	1
8		CQ202000000	OIL WICK	油线	0.45
9		CQ202000000	OIL WICK	油线	0.03
10		B1210051000	NEEDLE BAR CRANK PIN	针杆曲柄销	1
11		CQ202000000	OIL WICK	油线	1
12		21332606	COUNTER WEIGHT	针杆曲柄	1
13		SS8150822TP	SCREW 15/64-28 L=8	针杆曲柄销螺钉	2
14		SM8080812TP	SCREW M8X8	螺钉	2
15		21339502	UPPER FEED CAM (3.5)	上送布偏心轮	1
16		SS8660810TP	SCREW 1/4-40 L=8	偏心轮支紧螺钉	2
17		21333109	UPPER SHAFT INNER METAL	上轴中轴套	1
18		CQ202000000	OIL WICK	油线	0.15
19	#3	21336557	ECCENTRIC CAM A ASM.	下送料偏心轮组件	1
20	#3	21336508	ECCENTRIC CAM A	下送料偏心轮	1
21	#3	SS8660810TP	SCREW 1/4-40 L=8	下送料偏心轮支紧螺钉	2
22		SS7120760SP	SCREW 3/16-28 L= 7.0	下轴轴承固定螺钉	2
23		22604904	UPPER SPROCKET	上轴同步带轮	1
24		SS6661110SP	SCREW 1/4-40 L=11	上轴同步带轮支紧螺钉	2
25		40038694	TIMING BELT	同步带	1
26		B1203512000	BUSHING REAR	轴承	1
27		21402300	UPPER SHAFT BEARING HOOK	上轴轴承套	1
28		SM8060602TP	SCREW M6X6	上轴轴承套螺钉	2
29	#1	SS8660612TP	SCREW 1/4-40 L=6	螺钉1/4-40L=6	2
30		SS8150822TP	SCREW 15/64-28 L=8	皮带轮螺钉	2
31		21387501	LOWER SPROCKET	下轴同步带轮	1
32		B1214019000	SPROCKET RING	下同步带轮环	1
33		SS8661030SP	SCREW 1/4-40 L=10	下轴轴承芯棒螺钉	(2)
34		SB120000200	BEARING 20X42	轴承	1
35	#3	21333802	SAFETY CLUTCH PUSH BUTTON	按钮	1
36		RE0500000K0	E-RING	开口挡圈	1
37		B1639051000	SPRING	按钮簧	1
38		B1313055000	SAFETY CLUTCH KNOB SLEEVE	按钮架	1
39	#3	21333901	SAFETY CLUTCH DISC	按钮卡轮	1
40	#3	SS8660530TP	SCREW 1/4-40 L= 4.5	按钮卡轮支头螺钉	2
41		40038700	THRUST COLLAR ASM.	下轴轴承芯棒组件	1
42		40038702	THRUST COLLAR	下轴轴承芯棒	(1)
43	#3	21353008	HORIZONTAL FEED CAM COVER	下送料偏心轮压板	1
44	#3	SS7110710SP	SCREW 11/64-40 L=7	下送料偏心轮压板螺钉	2
45		21427000	FLYWHEEL	手轮	1
46	#1	40019905	TRIANGUAR CAM A	下送料偏心轮	1
47	#1	B1312563000A	SAFETY CLUTCH PUSH BUTTON	按钮	1
48	#1	SS8150710TP	SCREW 15/64-28 L=7	按钮卡轮支头螺钉	2
49	#1	21333703	SAFETY CLUTCH DISC	按钮卡轮	1

#1 FOR 1780L #3 FOR 1780-7

3.针杆摆动装置（Needle bar rocking）

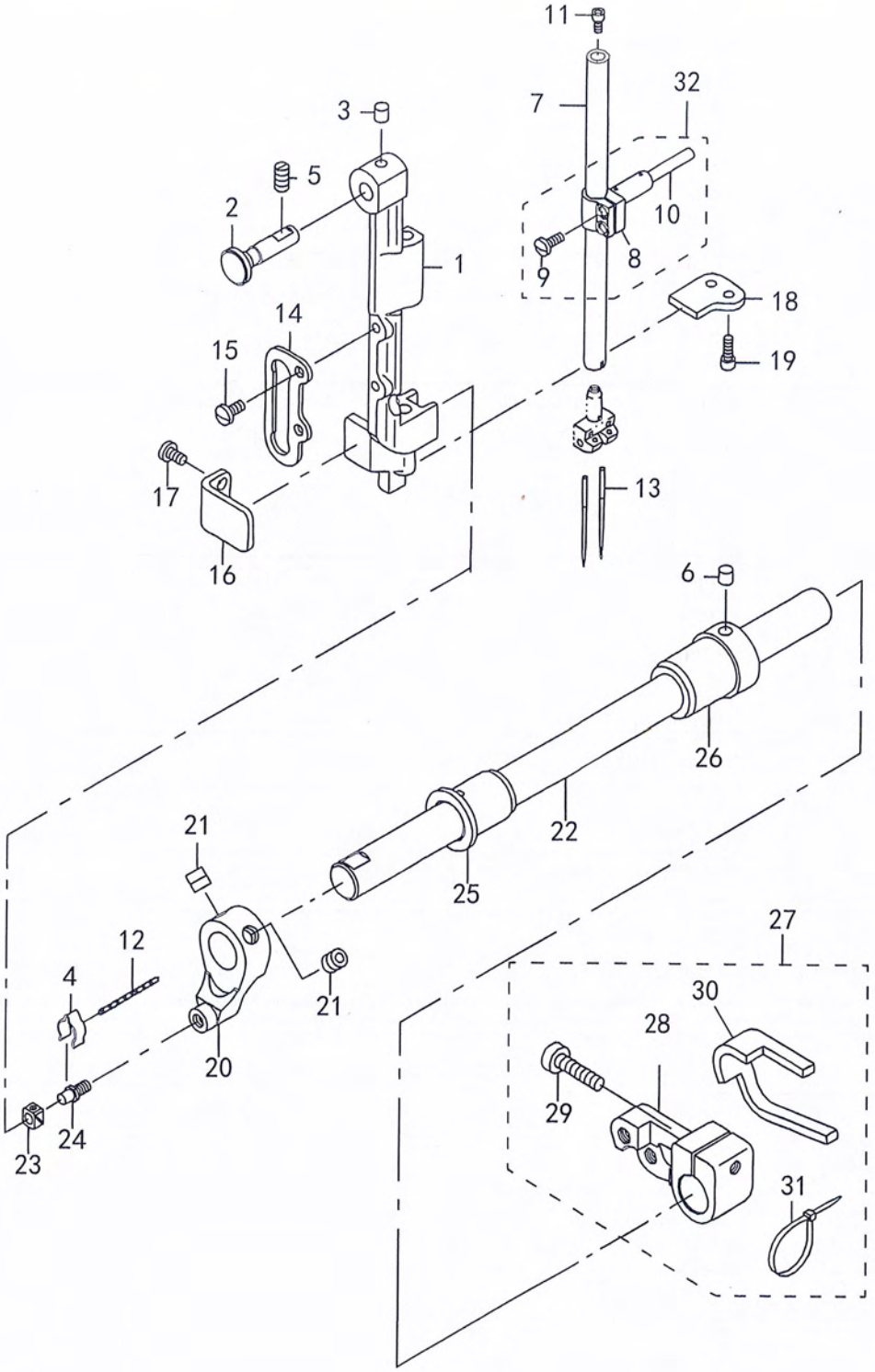

序号	说明	编码及型号	英文名称	中文名称	数量
1		23002009	NEEDLE BAR FRAME	针杆架	1
2		21405204	HINGE STUD	针杆架铰链轴	1
3		22814909	FELT	针杆架油毡	1
4		B1437051000	OIL WICK RETAINER	针杆摆动曲柄油线夹簧	1
5		SS8151150TP	SCREW 15/64-28 L=10.5	针杆架销螺钉	1
6		22814909	FELT	油芯	1
7		21451406	NEEDLE BAR	针杆	1
8		B1411057000	NEEDLE ROD HOLDER	针杆接头	1
9		SS7090910SP	SCREW 9/64-40 L= 8.5	针杆接头螺钉	1
10		CQ202000000	OIL WICK	油芯	0.04
11		LS3A6	SCREW M3X0.5 L=6	螺钉	1
12		CQ202000000	OIL WICK	油芯	0.05
13		MC372001600	NEEDLE SY3355 160	机针 SY3355 160	2
14		41438007	UPPER FEED BAR GUIDE	防震板	1
15		SS7110910TP	SCREW 11/64-40 L= 8.5	防震板螺钉	2
16		21388400	ROCKING BASE GUIDE	角板	1
17		SS7110830SP	SCREW 11/64-40 L= 7.5	角板螺钉	2
18		21338603A	ROCKING BASE GUIDE (B)	针杆架限位板	1
19		SS6091022TP	SCREW	针杆架限位板螺钉	2
20		21338801	ROCKING FRONT ARM	针杆摆动曲柄	1
21		SM8080812TP	SCREW	螺钉	2
22		21338900	ROCKING SHAFT	针杆摆动轴	1
23		B1414232000	SQUARE BLOCK	针杆摆动滑块	1
24		B1410771000	STUD	针杆摆动滑块锁销	1
25		21339304	ROCKING SHAFT FRONT METAL	针杆摆动轴左轴套	1
26		40027746	BUSHING REAR	针杆摆动轴右轴套	1
27		21339056	ROCKING REAR ARM ASM.	针杆摆动(送布)曲柄组件	1
28		21339007	ROCKING REAR ARM	针杆摆动(送布)曲柄	1
29		SS6152440SP	SCREW 15/64-28 L=23.5	针杆摆动(送布)曲柄螺钉	-1
30		21347406	ROCKING REAR ARM FELT	针杆摆动(送布)曲柄油毡	1
31		EA9500B0000	CABLE BAND	线卡	2
32		B14110570A0	NEEDLE BAR CLAMP ASM	针杆接头组件	1

4. 上送料机构（Pressure adjusting & upper feed mechanism ）

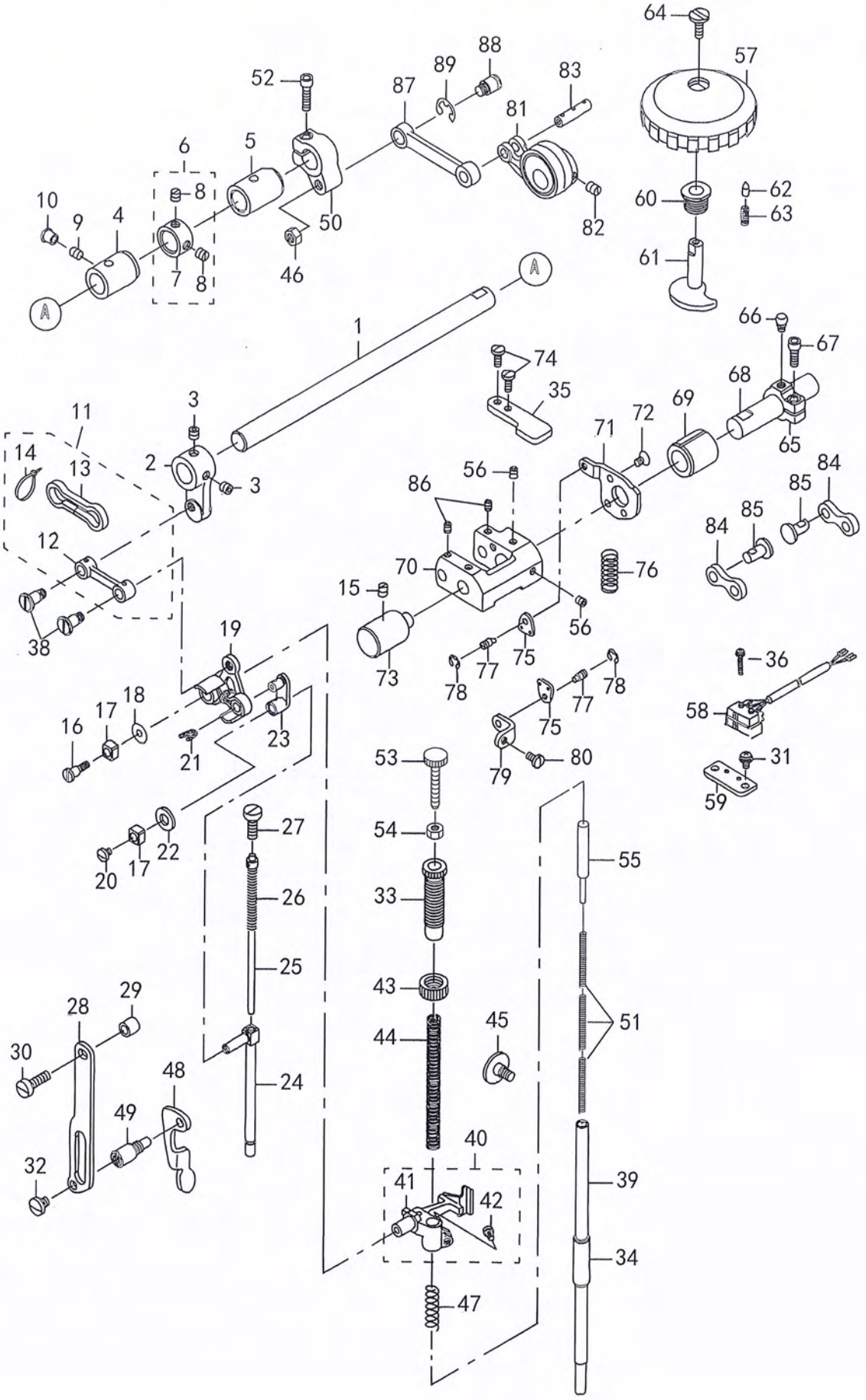

序号	说明	编码及型号	英文名称	中文名称	数量
1		21340401	UPPER FEED SHAFT	上送布轴	1
2		21340500	UPPER FEED FRONT ARM	上送布轴曲柄	1
3		SS8660612TP	SCREW 1/4-40 L=6	上送布轴曲柄支头螺钉	2
4		21341904	FRONT METAL	上送布轴左轴套	1
5		21378302	FEED SHAFT METAL	上送布轴右轴套	1
6		22904155	MAIN SHAFT THRUST COLLAR ASM.	上送布轴紧圈组件	1
7		22904106	MAIN SHAFT THRUST COLLAR	上送布轴紧圈	-1
8		SS8660610TP	SCREW 1/4-40 L=6	上送布轴紧圈螺钉	2
9		SS8150822TP	SCREW 15/64-28 L=7	轴套支紧螺钉	1
10		TA0750704R0	RUBBER PLUG	橡皮塞	1
11		40033027	UPPER FEED LINK ASM.	上送料连杆组件	1
12		40033026	UPPER FEED LINK	上送料连杆	-1
13		21347109	FELT	上送料连杆油毡	-1
14		EA9500B0000	CLIP CV-70S	尼龙自锁夹	-2
15		SS8150710SP	SCREW 15/64-28 L=7	螺钉	1
16		SD0640701SP	SCREW	抬压脚滑块螺钉	1
17		B1414555000	SLIDE BLOCK	抬压脚滑块	2
18		WP0501046SC	WASHER 5 X 13 X 1	抬压脚滑块垫圈	1
19		40033029	TRIANGULAR LEVER ASM.	角形连杆	1
20		SS7110510SP	SCREW 11/64-40 L=5	防震滑块螺钉	1
21		CQ202000000	OIL WICK	油芯	0.02
22		10509701	FELT	角形连杆小连接油毡	1
23		B1456053000L	WALKING BAR DRIVING LINK	角形连杆小连接	1
24		40033033	WALKING BAR A	内压紧杆	1
25		B14670530A0	WALKING BAR ASM.	内压脚弹簧杆	1
26		B1468053000	WALKING BAR SPRING	内压脚弹簧	1
27		SS6151780SP	SCREW 15/64-28 L=17.0	内压紧杆螺钉	1
28		21406509	UPPER FEED GUIDE PLATE	抬压脚导轨	1
29		26225201	ROLLER	抬压脚导轨垫圈	
30		SS6151920SP	SCREW 15/64-28 L=19.0	抬压脚导轨螺钉(上)	1
31		SM6040800SP	SCREW M4 L=8	开关座螺钉	2
32		SS7150740SP	SCREW 15/64-28 L=7	螺钉	1
33		21006408	ADJUST SCREW A	调压大螺杆	1
34		B1510155000	PRESSER BAR LOWER BUSHING	压紧杆轴套	1
35		21339700	UPPER FEED STOPPER PLATE	挡板	1
36		020497	SCREW M2.5*16	螺钉	2
37		SS4110815SP	SCREW 1/4-40 L=8	螺钉	2
38		40018340	SCREW	螺钉	2
39		21451505	PRESSER BAR	压紧杆	1
40		40039265	PRESSER BAR HOLDER A ASM.	压紧杆夹头组件	1
41		40039266	PRESSER BAR HOLDER A	压紧杆夹头	1
42		SS7110910TP	SCREW 11/64-40 L= 8.5	压紧杆夹头螺钉	1
43		22907604	PRESSER SPRING REGULATOR NUT	调压螺帽	1
44		B1502246000	PRESSER SPRING	调压簧	1
45		SD0800481SP	HINGE SCREW D= 8 H= 4.9	压紧杆夹头限位螺钉	1
46		NS6680320SP	NUT 9/32-28	螺母	1
47		B1462053000	THREAD RELEASE SPRING	压紧杆夹头弹簧	1
48		21406103	PRESSER LIFTER LEVER	压脚扳手	1
49		21406608	GUIDE PLATE SPACER	压脚扳手螺钉	1
50		21340302	UPPER FEED REAR ARM (B)	压脚交替提升曲柄	1

4. 上送料机构（Pressure adjusting & upper feed mechanism ）

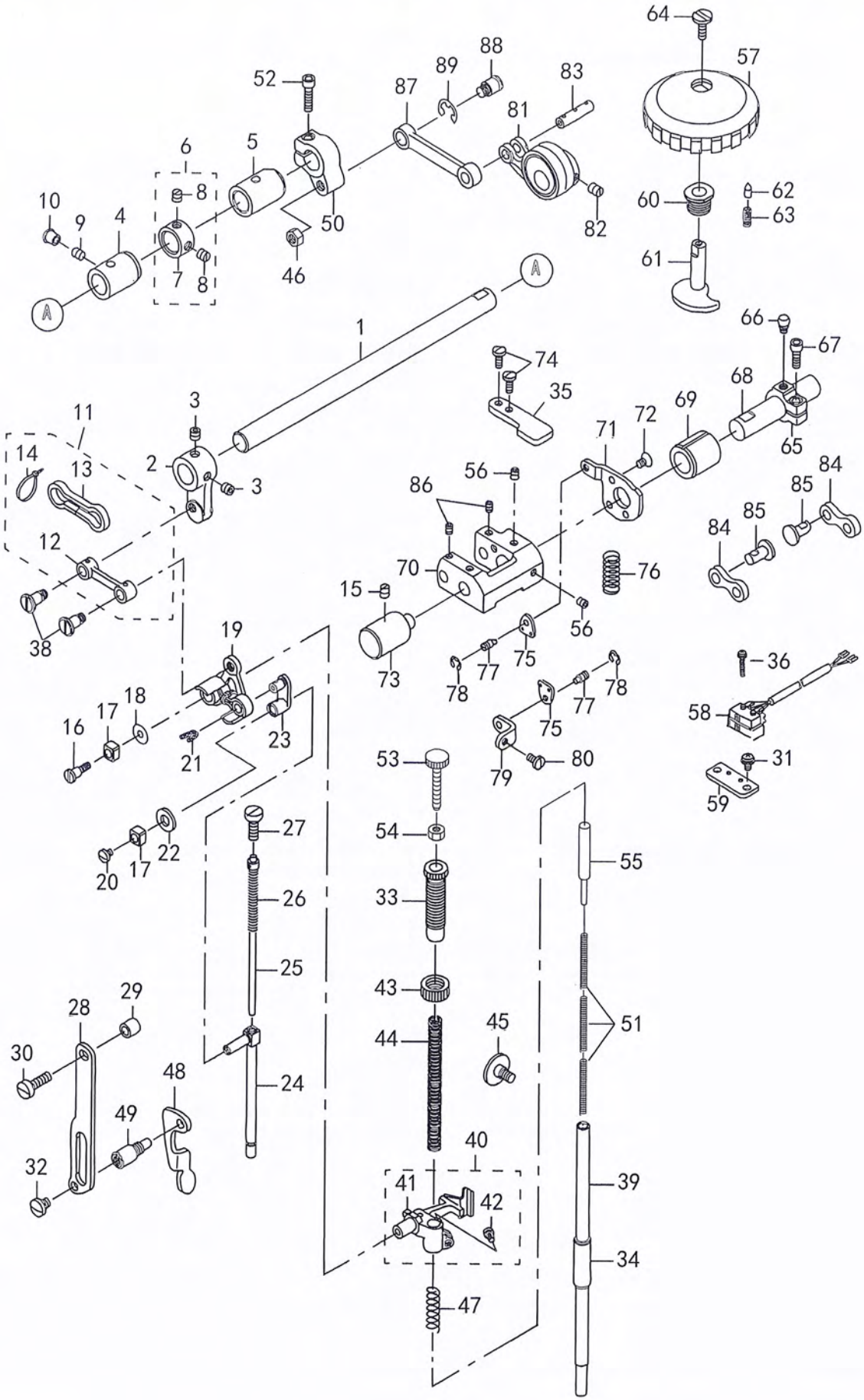

序号	说明	零件号	英文名称	中文名称	数量
51		21006002	ADJUST SPRING B	弹簧	3
52		SM6052002TP	SCREW M5 L=20	压脚交替提升曲柄并紧螺钉	1
53		21006507	ADJUST SCREW B	调压小螺杆	1
54		NS6110530SP	NUT 11/64-40	螺母11/64-40	1
55		40072709	SPRING SUPPORT SHAFT ASM.	调压导杆	1
56		SM8050602TP	SCREW M5 L=6	螺钉	2
57		10774354	UPPER AND LOWER DIAL ASM.	压脚胶替提升调节盘组件	(1)
58		40024852	VERTICAL DETECTOR SWITCH ASM.	限速开关组件(1045MM)	1
59		020494A	VERTICAL DETECTOR SWITCH ASM.	开关座	1
60		10715100	VERTICAL DIAL SHAFT BUSHING	压脚调节凸轮轴套	1
61		10715001	VERTICAL ADJUSTING CAM	压脚交替提升调节凸轮	1
62		10715704	VERTICAL DIAL PIN	压脚交替提升调节盘止动销	1
63		B152652700G	SPRING	压脚交替提升调节盘止动弹簧	1
64		SS6110630TP	SCREW 11/64-40 L=6	压脚交替提升调节凸轮螺钉	1
65		21341607	VERTICAL ADJUSTING ARM	压脚交替提升调节曲柄	1
66		10715308	PIN	压脚交替提升调节曲柄销	1
67		SM6051402TP	SCREW M5X0.8 L=14	压脚交替提升调节曲柄螺钉	1
68		21341508	VERTICAL CHANGE BASE SHAFT	压脚交替提升轴	1
69		10718203	FEED SHAFT FRONT METAL	压脚交替提升轴套	1
70		10714202	VERTICAL CHANGE BELT	压脚交替提升变动曲柄	1
71		21438106	STOPPER PLATE B	支架板	1
72		SM1050801SR	SCREW M5 L=8	上送料弹簧支架螺钉	1
73		21337803	FEED ADJUSTING BASE SUPPORT	变动曲柄轴	1
74		SS4110815SP	SCREW	挡板螺钉	2
75		10713501	SPRING HOOK	曲柄拉簧支板	2
76		10716504	VERTICAL SHAFT SPRING	曲柄拉簧	1
77		B3416552000	CONNECTING ROD HINGE SCREW	簧板连接铰接螺栓	2
78		RE0500000K0	E-RING	开口挡圈	2
79		21339809	UPPER FEED DOG SPRING HOOK	上送料限位簧板	1
80		SS7110830SP	SCREW 11/64-40 L= 7.5	上送料限位簧板螺钉	1
81		10713766	ECCENTRIC ROD (SET)	压脚交替提升大连杆	1
82		SS8660810TP	SCREW 1/4-40 L=8	偏心轮螺钉	2
83		10713808	CONNECTION LINK PIN B	压脚交替提长连杆销	1
84		10714509	CONNECTION LINK B	曲柄短连杆	2
85		10714608	CONNECTION LINK B SUPPORT PIN	曲柄短连杆销	2
86		SM8050602TP	SCREW M5 L=6	螺钉	2
87		21340005	UPPER FEED LINK (B)	压脚交替提升曲柄连杆	1
88		21048707A	HINGE SCREW	压脚交替提升曲柄连杆螺钉	1
89		RE0800000K0	E-SHAPED SNAP RING (8MM)	压脚交替提升曲柄连杆挡圈	1

5(1)、送料机构（FEED MECHANISM COMPONENTS)(1780L)

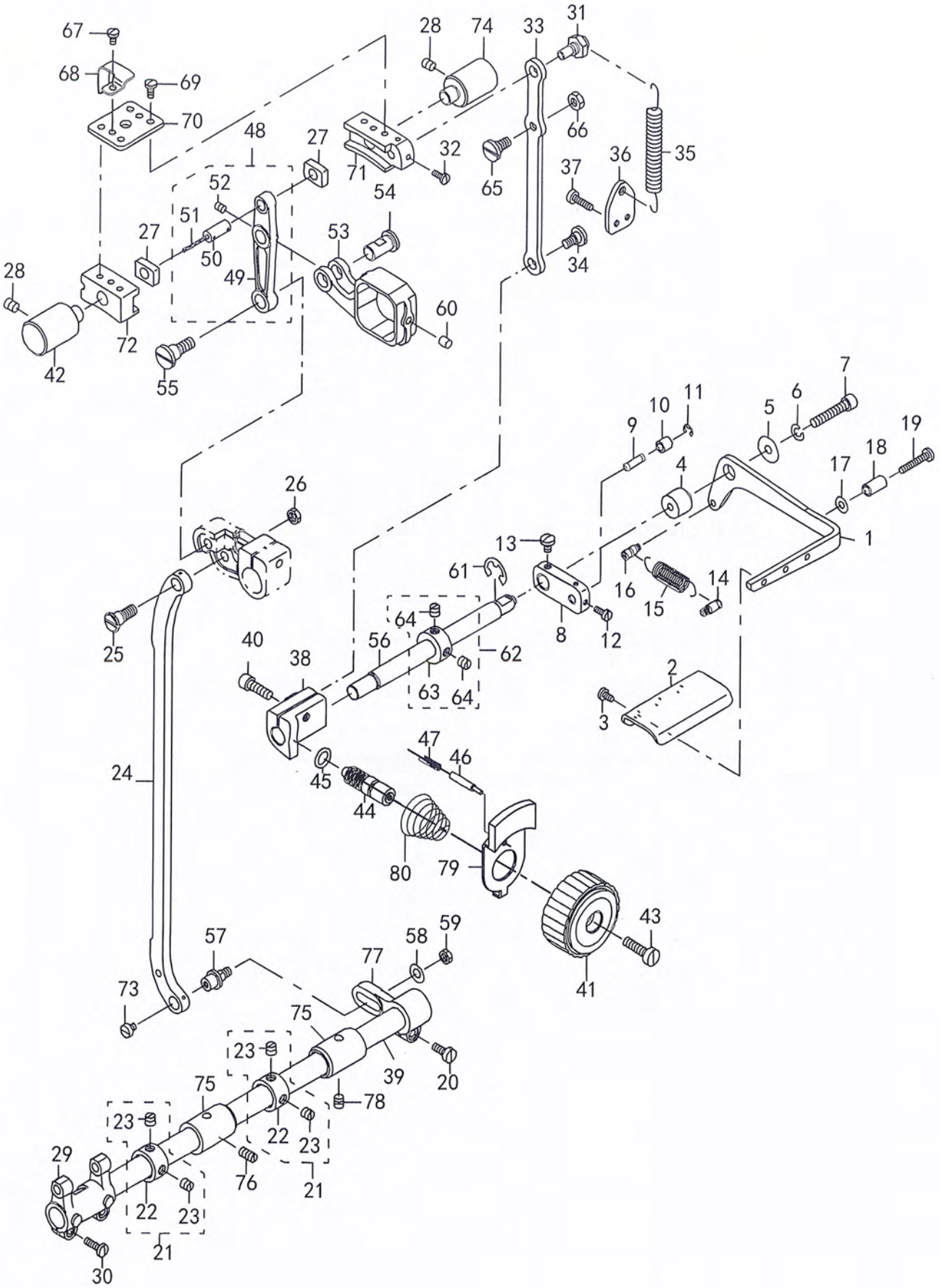

序号	说明	编码及型号	英文名称	中文名称	数量
1		21337001	BACKWARD FEED LEVER B	倒缝手柄杆	1
2		21337100	BACKWARD FEED PRESSER PLATE	倒缝手柄板	1
3		SS7110710SP	SCREW 11/64-40 L=7	螺钉11/64-40 L=7	3
4		21352901	BACKWARD FEED LINK FULCRUM	垫圈	1
5		WP0612056SD	WASHER 6.1X18.5X2	平垫圈	1
6		WS0610002KP	SPRING WASHER	连接器	1
7		SS6153012TP	SCREW 15/64-28	螺钉	1
8		40039454	CHANGE BASE	倒缝扳手传动柄	1
9		D2461481C00	CONNECTING PIN	倒缝扳手传动柄销	1
10		26023200	FEED CAM ROLL	滚子	1
11		RE0400000K0	E-RING 4	卡簧	1
12		SS6090910SP	SCREW 9/64-40 L=9	螺钉	2
13		SS7120710SP	SCREW 3/16-28 L=7	螺钉	2
14		10120004	SPRING SUSPENSION	拉簧螺钉	1
15		13789201	TENSION SPRING	拉簧	1
16		11272614	FEED SPRING HOOK	拉簧螺丝	1
17		PD6	WASHER	平垫圈	1
18		22952501	BACK LEVER STOPPER	胶套	1
19		SS7112420SP	SCREW 11/64-40 L=24	螺钉	1
20		SS6121210SP	SCREW 3/16-28 L=12	螺钉	1
21		22904155	MAIN SHAFT THRUST COLLAR ASM.	主轴止推紧圈组件	2
22		22904106	FEED LEVER SUPPORT	主轴止推紧圈	-1
23		SS8660610TP	FEED LEVER BASE	螺钉1/4-40L=6	-2
24		40039307	SCREW 9/64-40 L=6.8	针柱连杆	1
25		SD0900701TP	HINGE SCREW D=9 H=7	螺钉D=9 H=7	1
26		NS6680320SP	WASHER 6.5X11X1	螺母 9/32-28	1
27		21407309	FEED DRIVING SLIDE BLOCK	滑块（带圆弧）	2
28		SS8150822TP	SCREW 15/64-28 L=8	螺钉15/64-28 L=8	2
29		21364104	FEED ROCKER	送料摇臂	1
30		SS7111410TP	SCREW 11/64-40 L=14	螺钉11/64-40L=14	2
31		21337902	ECCENTRIC PIN	偏心销	1
32		SS7090910TP	SCREW 9/64-40 L=8.5	螺钉	2
33		21337308	FEED ADJUSTING ROD	送料调节连杆	1
34		SD0800402TP	HINGE SCREW D=8 H=4	螺钉 D=8 H=4	1
35		40038901	SPRING B	弹簧	1
36		21338009	SPRING HOOK	弹簧钩板	1
37		SS6111610SP	SCREW 11/64-40 L=16	安装座螺钉	2
38		23056104L	FEED REGULATOR (P=12)	送料调节块A	1
39		020573	FEED ROCK SHAFT	送料摇臂轴	1
40		SM6061802TP	SCREW M6 L=18	螺钉M6 L=18	1
41		23056203A	FEED DIAL (C)	送料刻度盘	1
42		21430400	FEED ADJUSTER SUPPORT	送料调节座支架	1
43		SS6121860SP	SCREW 3/16-28 L=18	螺钉3/16-28L=18	1
44		22911804	FEED REGULATOR SCREW	送料调节器螺钉L=54.2	1
45		R0092270200	RUBBER RING	橡胶圈	1
46		22912000	FEED REGULATOR PIN	止动销	1
47		22912109	FEED REGULATOR PIN SPRING	送料调节器销弹簧	1
48		21336656	FEED LINK ASM.	送料连杆组件	1
49		21336607	FEED LINK	送料连杆	-1
50		40009103	CONNECTING FORKED LINK PIN	叉形连杆销	-1

5(1)、送料机构（FEED MECHANISM COMPONENTS)(1780L)

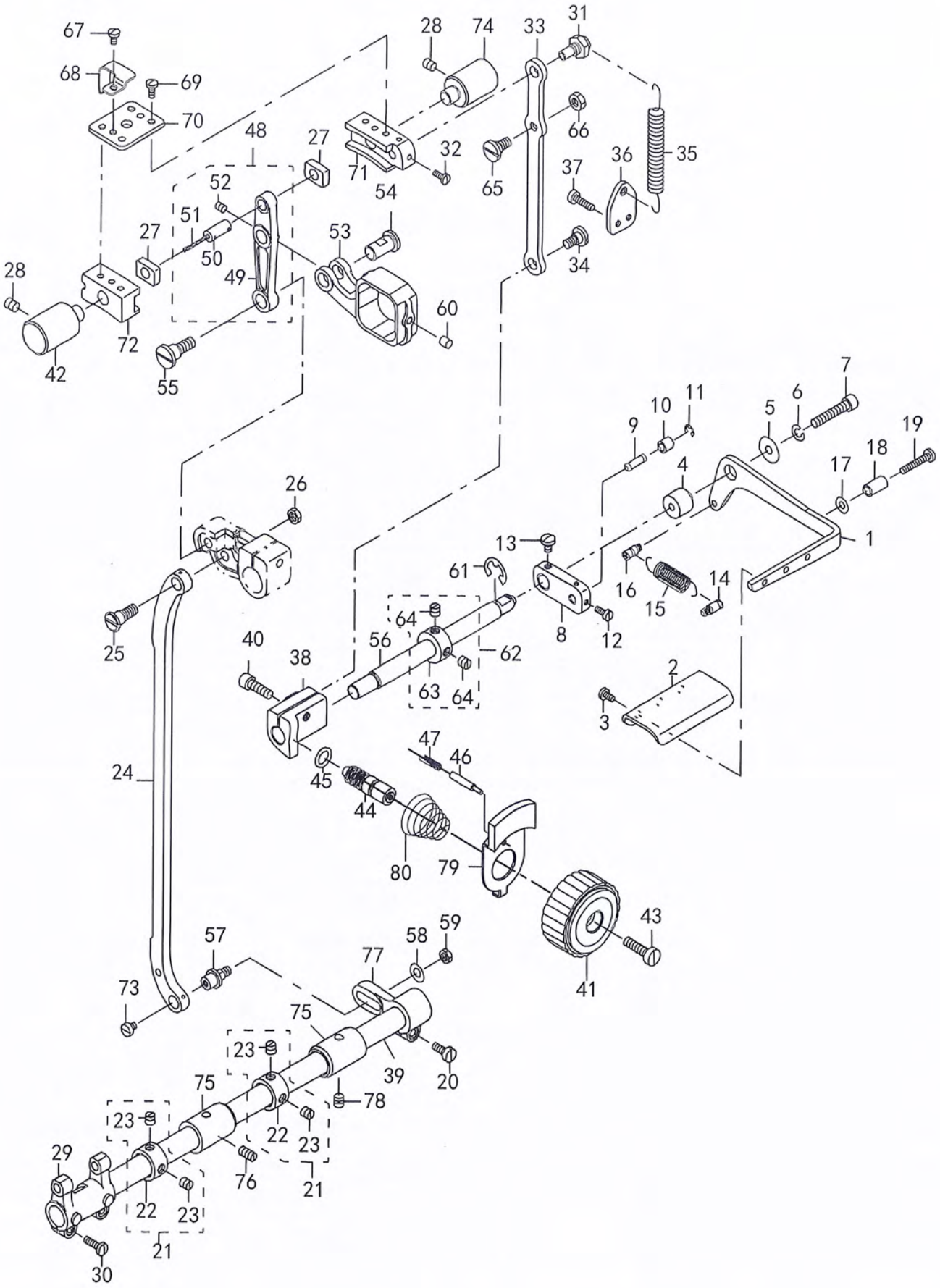

序号	说明	编码及型号	英文名称	中文名称	数量
51		CQ202000000	OIL WICK	油线	-0.04
52		SM8050612TP	SCREW M5X6	螺钉	-1
53		40011400	FEED ROD (C)	送料连杆A(粗线用)	1
54		21338207	FEED LINK PIN	送料连杆销	1
55		SD1000801SH	HINGE SCREW D=10 H=8	螺钉D=10 H=8	1
56		21336409	BACKWARD FEED LEVER SHAFT B	反向送料连杆轴	1
57		21378203	FEED ROCK SHAFT HINGE SCREW	送步驱动曲柄连杆铰链螺	1
58		WP0650876SD	WASHER 6.5X13X0.8	垫圈	1
59		NS6150310SP	NUT 15/64-28	螺帽15/64-28	1
60		21387402	FELT	油毡	1
61		RE0900000K0	E-RING 9	开口挡圈9	1
62		CS1201010SH	THRUST COLLAR ASM. D=12 W=10	止推紧圈组件D=12 W=10	1
63		CS1201011SH	THRUST COLLAR D=12 W=10	止推紧圈D=12 W=10	-1
64		SS8660610TP	SCREW 1/4-40 L=6	螺钉1/4-40L=6	-2
65		SD0800402TP	HINGE SCREW D=8 H=4	螺钉 D=8 H=4	1
66		NS6150430SP	NUT 15/64-28	螺母	1
67		SS7110710SP	SCREW 11/64-40 L=7	螺钉11/64-40 L=7	1
68		40038712	FELT HOLDER	毛毡座	1
69		SS7110910TP	SCREW 11/64-40 L=8.5	螺钉11/64-40 L=8.5	4
70		21407408	FITTING PLATE	送料调节座连接板	1
71		21407200	FEED ADJUSTING BASE	送料调节右座	1
72		40038711	FEED ADJUSTING BASE B	送料调节左座	1
73		SS6110630TP	SCREW 11/64-40 L=6	螺丝	1
74		21337803	FEED ADJUSTING BASE SUPPORT	送料调节座支架	1
75		21378302	FEED SHAFT METAL	送料轴套	2
76		SS8151150TP	SCREW 15/64-28 L=10.5	螺钉15/64-28L=10.5	1
77		B3025141H00A	CONNECTING ARM	送步轴驱动曲柄	1
78		SS8150710TP	SCREW 15/64-28 L=7	按钮卡轮支头螺钉	1
79		010561	BOTTON	离合按钮	1
80		010562	SPRING	弹簧	1

5(2)、送料机构（FEED MECHANISM COMPONENTS）（1780-7）

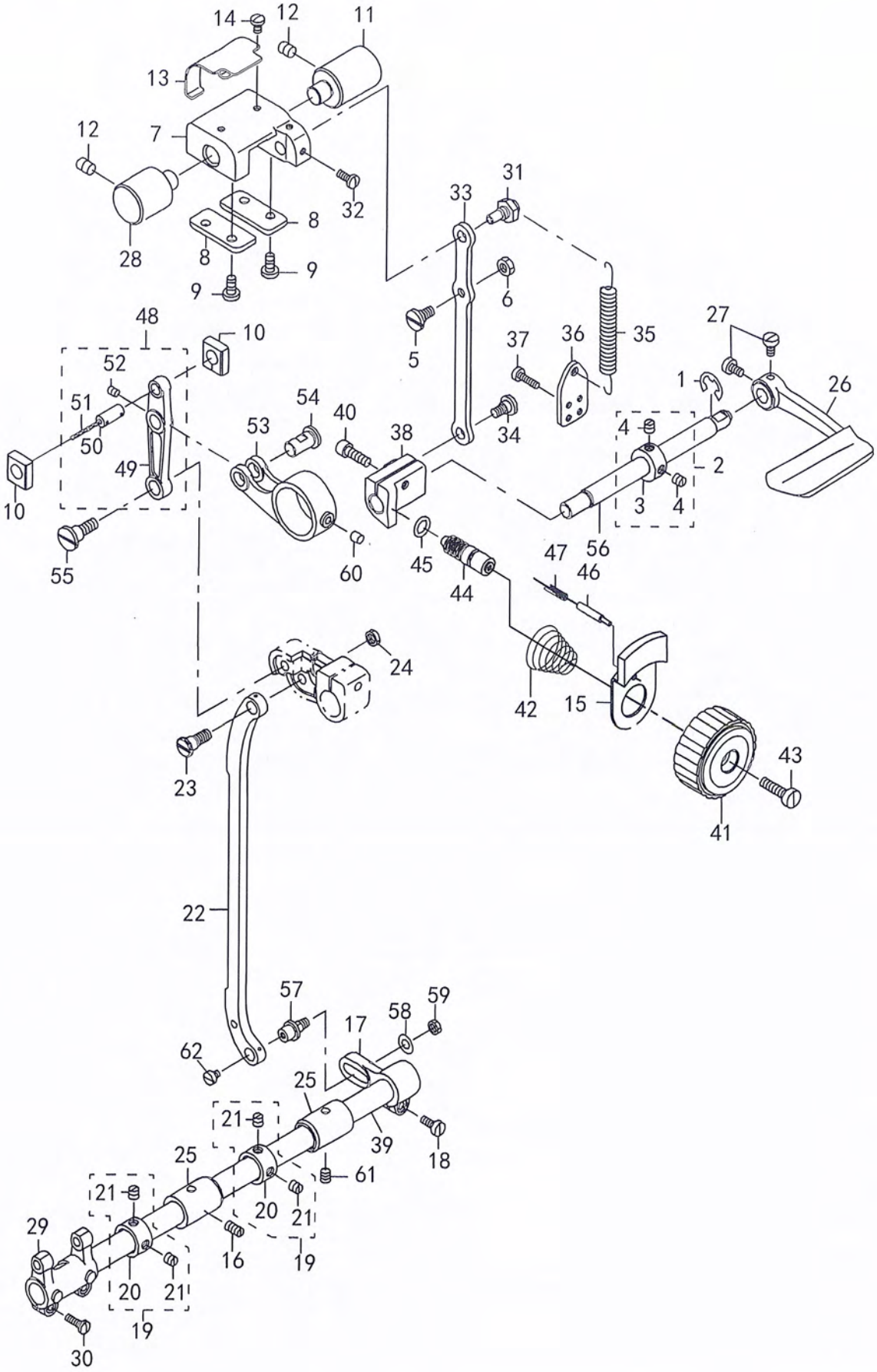

序号	说明	编码及型号	英文名称	中文名称	数量
1		RE0900000K0	E-RING 9	开口挡圈9	1
2		CS1201010SH	THRUST COLLAR ASM. D=12 W=10	止推紧圈组件D=12 W=10	1
3		CS1201011SH	THRUST COLLAR D=12 W=10	止推紧圈D=12 W=10	-1
4		SS8660610TP	SCREW 1/4-40 L=6	螺钉1/4-40L=6	-2
5		SD0800402TP	HINGE SCREW D=8 H=4	螺钉 D=8 H=4	1
6		NS6150430SP	NUT 15/64-28	螺母	1
7		21337506	Feed adjusting seat	送料调节座	1
8		40038712	FELT HOLDER	毛毡座	1
9		SS7110910TP	SCREW 11/64-40 L=8.5	螺钉11/64-40 L=8.5	4
10		21337407	SQUARE BLOCK	针距调节曲柄滑块	2
11		21337803	FEED ADJUSTING BASE SUPPORT	针距调节曲柄轴	2
12		SS8150822TP	SCREW 15/64-28 L=8	支紧螺钉	2
13		21338306	FELT SUPPORT	针距调节曲柄油毡压板	1
14		SS5090610SP	SCREW 9/64-40 L=6	针距调节曲柄油毡压板螺钉	2
15		010561	BOTTON	离合按钮	1
16		SS8151150TP	SCREW 11/64-40 L=8.5	螺钉11/64-40L=8.5	2
17		B3025141H00A	CONNECTING ARM	送步轴驱动曲柄	1
18		SS6121210SP	SCREW 3/16-28 L=12	螺钉3/16-28L=15.5	1
19		22904155	MAIN SHAFT THRUST COLLAR ASM.	主轴止推紧圈组件	2
20		22904106	MAIN SHAFT THRUST COLLAR	主轴止推紧圈	-1
21		SS8660610TP	SCREW 1/4-40 L=6	螺钉1/4-40L=6	-2
22		40039307	FEED REGULATOR CONNECTING ROD	针柱连杆	1
23		SD0900701TP	HINGE SCREW D=9 H=7	螺钉D=9 H=7	1
24		NS6680320SP	NUT 9/32-28	螺母 9/32-28	1
25		21378302	FEED SHAFT METAL	送料轴套	2
26		21388004	REVERSE FEED ROCK SHAF	倒缝控制杆	1
27		SS6120930TP	SCREW 3/16-28 L=9	螺钉3/16-28L=9	2
28		21430400	FEED ADJUSTING BASE SUPPORT	送料调节座支架（短）	1
29		21364104	FEED ROCKER	送料摇臂	1
30		SS7111410TP	SCREW 11/64-40 L=14	螺钉11/64-40L=14	2
31		21337902	ECCENTRIC PIN	偏心销	1
32		SS7090910TP	SCREW 9/64-40 L=8.5	螺钉	2
33		21337308	FEED ADJUSTING ROD	送料调节连杆	1
34		SD0800402TP	HINGE SCREW D=8 H=4	螺钉 D=8 H=4	1
35		21337605	SPRING	弹簧	1
36		40019926	SPRING HOOK	弹簧钩板	1
37		SS6111610SP	SCREW 11/64-40 L=16	安装座螺钉	2
38		21337209	FEED ADJUSTING A	送料调节块A	1
39		020573	FEED ROCK SHAFT	送料摇臂轴	1
40		SM6061802TP	SCREW M6 L=18	螺钉M6 L=18	1
41		21336805A	FEED DIAL A	针距标盘	1
42		010562	SPRING	弹簧	1
43		SS6121860SP	SCREW 3/16-28 L=18	针距标盘螺钉	1
44		22911804	FEED REGULATOR SCREW	送料调节器螺钉L=54.2	1
45		R0092270200	RUBBER RING	橡胶圈	1
46		010563	FEED REGULATOR PIN	止动销	1
47		22912109	FEED REGULATOR PIN SPRING	止动销弹簧	1
48		21336656	FEED LINK ASM.	送料连杆组件	1
49		21336607	FEED LINK	送料连杆	-1
50		40009103	CONNECTING FORKED LINK PIN	叉形连杆销	-1
51		CQ202000000	OIL WICK	油线	-0.04
52		SM8050612TP	SCREW M5X6	螺钉	-1
53		21336706	FEED ROD A	送料连杆A	1
54		21338207	FEED LINK PIN	送料连杆销	1
55		SD1000801SH	HINGE SCREW D=10 H=8	螺钉D=10 H=8	1
56		21336300	BACKWARD FEED LEVER SHAFT	反向送料连杆轴	1
57		21378203	FEED ROCK SHAFT HINGE SCREW	送步驱动曲柄连杆铰链螺钉	1
58		WP0650876SD	WASHER 6.5X13X0.8	垫圈	1
59		NS6150310SP	NUT 15/64-28	螺帽15/64-28	1
60		21387402	FELT	油毡	1
61		SS8150710TP	SCREW 15/64-28 L=7	按钮卡轮支头螺钉	1
62		SS6110630TP	SCREW 11/64-40 L=6	螺丝	1

6、切线部分（THREAD CUTTING COMPONENTS）

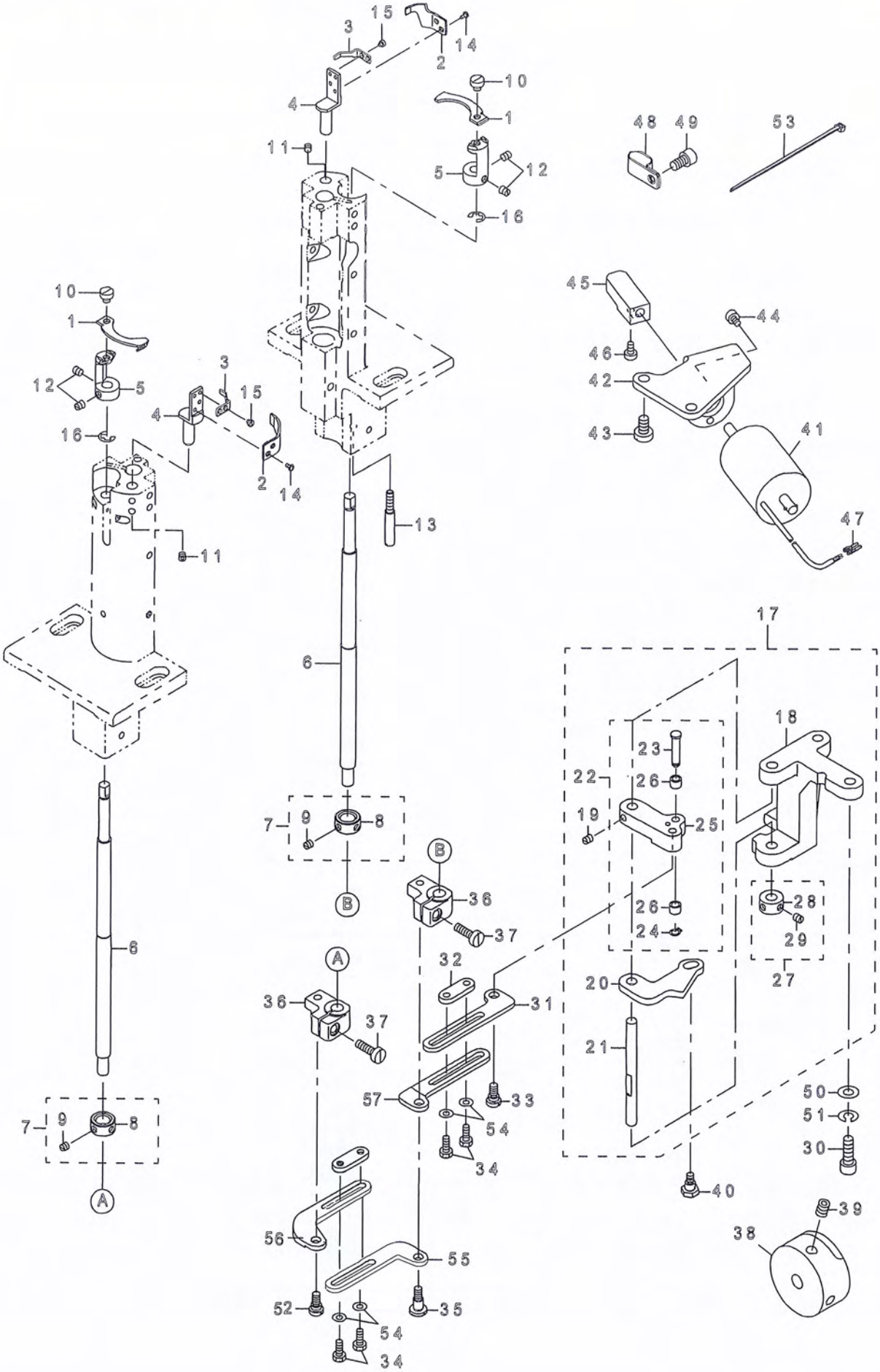

序号	说明	编码及型号	英文名称	中文名称	数量
1		21440607A	MOVING KNIFE	动刀	2
2		40038747	FIXED KNIFE	定刀	2
3		40039404	CLAMP SPRING B	夹线弹片	2
4		40038750	FIXED KNIFE INSTALLING BASE	定刀座	2
5		40038749	MOVING KNIFE INSTALLING BASE	动刀座	2
6		40038751	MOVING KNIFE DRIVING SHAFT	动刀转动轴	2
7		CS0950810SH	THRUST COLLAR ASM. D=9.5 W=8	止推紧圈组件D=9.5	2
8		CS0950816SH	THRUST COLLAR D=9.5 W=8	止推紧圈D=9.5 W=8	-2
9		SS8110410TP	SCREW 11/64-40 L= 3.5	螺钉11/64-40 L=3.5	-4
10		SS2110920TPA	SCREW 11/64-40 L=4.3	螺钉	2
11		LS4I4	SCREW M4X0.7 L=4	螺钉	4
12		SS8110520TP	SCREW 11/64-40 L= 4.5	螺钉	4
13		22790505	SENSOR SUPPORT SHAFT B	动刀限位柱	1
14		SS5060410SP	SCREW 3/32-56 L=3.5	螺丝	4
15		SS6060220SP	SCREW 3/32-56 L= 2.0	螺丝	4
16		KHZ6	E-RING	卡簧	2
17		40038744	VERTICAL FITTING BASIS ASM.	剪线驱动曲柄组件	1
18		21353701	VERTICAL FITTING BASIS	剪刀驱动曲柄座	-1
19		SS8110510SP	SCREW 11/64-40 L=5	螺钉	-2
20		21354006	THREAD CUTTING DRIVING PLATE	剪线驱动连杆	-1
21		10116804	SHAFT	剪线支架轴	-1
22		40119280	THREAD CUTTING ROLLER ARM ASM.	剪线驱动曲柄组件	-1
23		40104369	CAM ROLLER SHAFT	剪线凸轮滚子销钉	-1
24		D2430555B00	SNAP RING	剪线凸轮滚子销钉挡	-1
25		21353800	THREAD CUTTING ROLLER ARM	剪线驱动曲柄	-1
26		21440508	THREAD TRIMMER CAM ROLLER	切线驱动曲柄销滚柱	-2
27		CS070081BSH	THRUST COLLAR ASM. D=7 W=8	剪线支架轴轴套组件	-1
28		CS0700811SH	THRUST COLLAR D=7 W=8	剪线支架轴轴套	-1
29		SS8110510SP	SCREW 11/64-40 L=5	螺钉	-2
30		SS6151812TP	SCREW 15/64-28 L=18	剪线驱动曲柄座螺钉	2
31		40039262	CONNECTING ROD	剪线调节连杆	1
32		21354204	STOPPING PLATE	剪线调节连杆锁紧板	2
33		SD0640325SP	HINGE SCREW	剪线调节短连杆连接	1
34		SS9111010SP	SCREW 11/64-40 L=9.5	剪线调节连杆锁紧板	4
35		SD0640601SP	HINGE SCREW D= 6.35 H= 6.0	剪线调节连杆连接螺	1
36		40038983	ROCKING ARM	剪线曲柄	2
37		SS6121610TP	SCREW 3/16-28 L=15.5	螺钉	2
38		40038745	THREAD CUTTING CAM	切线凸轮	1
39		SS8660612TP	SCREW 1/4-40 L=6	螺钉	2
40		SD0640482SP	HINGE SCREW D= 6.35 H= 4.8	剪线驱动连杆螺钉	1
41		21355102	THREAD CUTTING SOLENOID	剪线电磁铁	1
42		21354600	SOLENOID FITTING PLATE	剪线电磁铁座	1
43		SS6151040SP	SCREW 15/64-28 L=10	剪线电磁铁座螺钉	2
44		SM6040802TP	SCREW M4X0.7 L=8	剪线电磁铁螺钉	2
45		21354709	SOLENOID CONNECTING PLATE	剪线驱动连杆连接块	1
46		SS6110710TP	SCREW 11/64-40 L= 6.5	螺钉	2
47		HK03464000B	PIN CONTACT	接线端子	2
48		D2112555B00	CORD HOLDER LARGE	电线固定夹	1
49		SM6061002TP	SCREW M6 L=10	螺钉	1
50		PD6	WASHER 6.2X13X1	平垫圈	2
51		THQ6	SPRING WASHER	弹簧圈	2
52		SD0640325SP	HINGE SCREW	剪线短连杆连接螺钉	1
53		EA9500B0100	CABLE BAND	剪线调节连杆螺钉	1
54		PD4	WASHER 5X10.5X1	平垫	4
55		032055	THREAD CUTTING DRIVING PLATE	剪线驱动连杆	1
56		032056	THREAD CUTTING DRIVING PLATE	剪线驱动连杆	1
57		032032	CONNECTING ROD	剪线调节连杆	1

7、下送料装置（FEED BASE COMPONENTS）

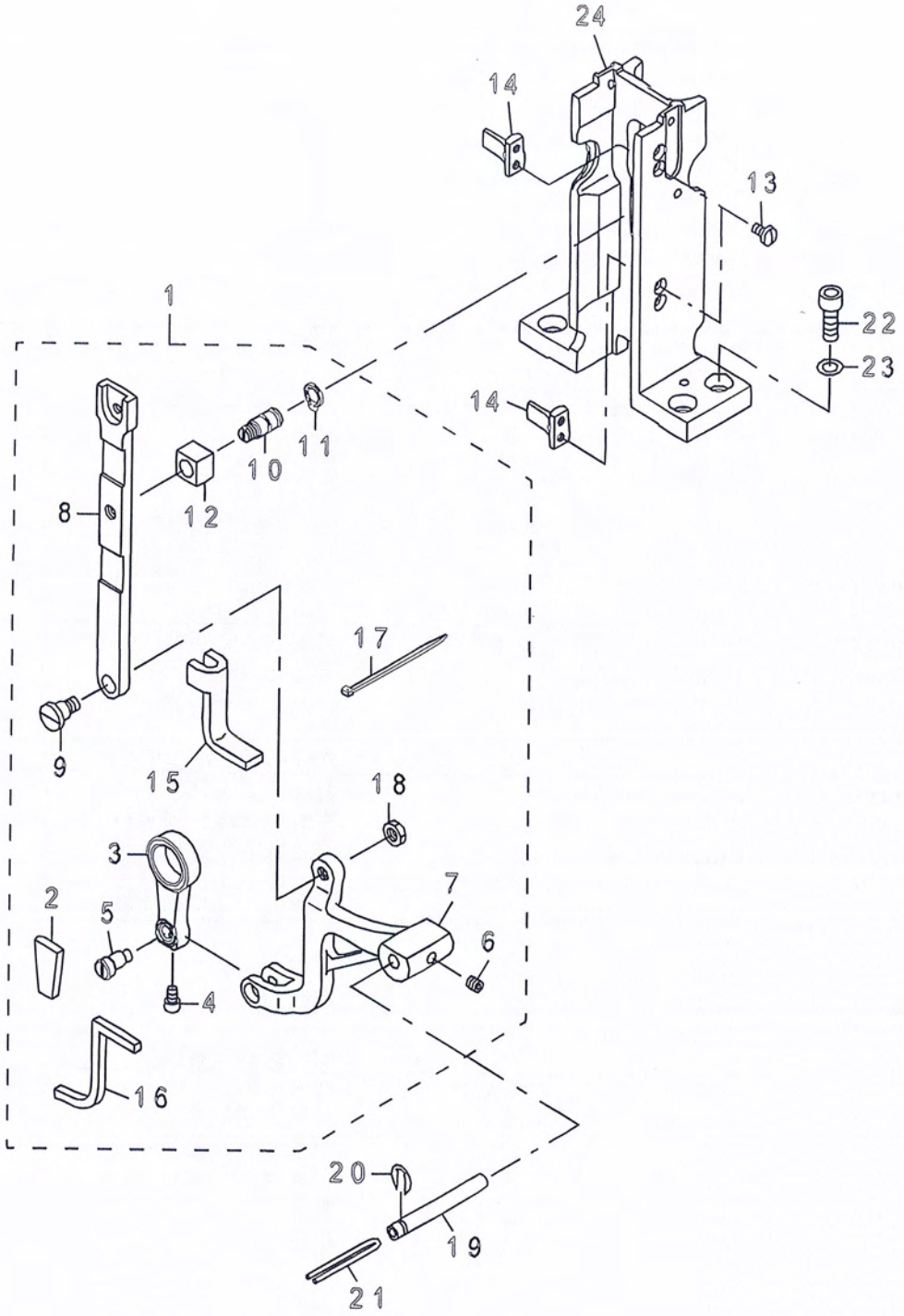

序号	说明	编码及型号	英文名称	中文名称	数量
1		40038859	FEED BAR ASM.	牙架组件	1
2		40038968	FELT (D)	油毡	-1
3		23200801	VERTICAL FEED LINK	牙架连杆	-1
4		SS6090612TP	SCREW 9/64-40 L=6	螺钉	-1
5		23200900	VERTICAL FEED LINK SHAFT	送布牙高低调节偏心轴	-1
6		SM8050502TP	SCREW M5 L=5	螺钉 M5L=5	-1
7		23056005	FEED BASE	牙架	-1
8		40039257	FEED LEVER	送布牙固定连杆	-1
9		40039015	FEED LEVER SCREW	送布牙连杆螺丝	-1
10		23009509	FEED LEVER SHAFT	滑块轴螺丝	-1
11		KHZ6	C-RING	卡簧	-1
12		13516703	SLIDE BLOCK B	滑块	-1
13		SS7090710SP	SCREW 9/64-40 L=6.8	螺钉	4
14		40017317	FEED LEVER SUPPORT	定位块	2
15		40038709	FELT A	油毡	-1
16		40038967	FELT (C)	油毡	-1
17		EA9500B0100	CABLE BAND	线卡	-6
18		NS6150310SP	NUT 15/64-28	螺帽15/64-28	-1
19		B1604012000A	FEED BAR SHAFT	送料座轴	1
20		RE0500711KP	SNAP RING 5	开口挡圈5	1
21		CQ202000000	OIL WICK	油线	0.14
22		LA6A16	SCREW M6 L=16	气缸安装螺钉	4
23		PD6	WASHER 6.1X11X2	垫片	4
24		40038707	FEED LEVER BASE	中座（双针）	1

8.夹线机构（Thread tension components）

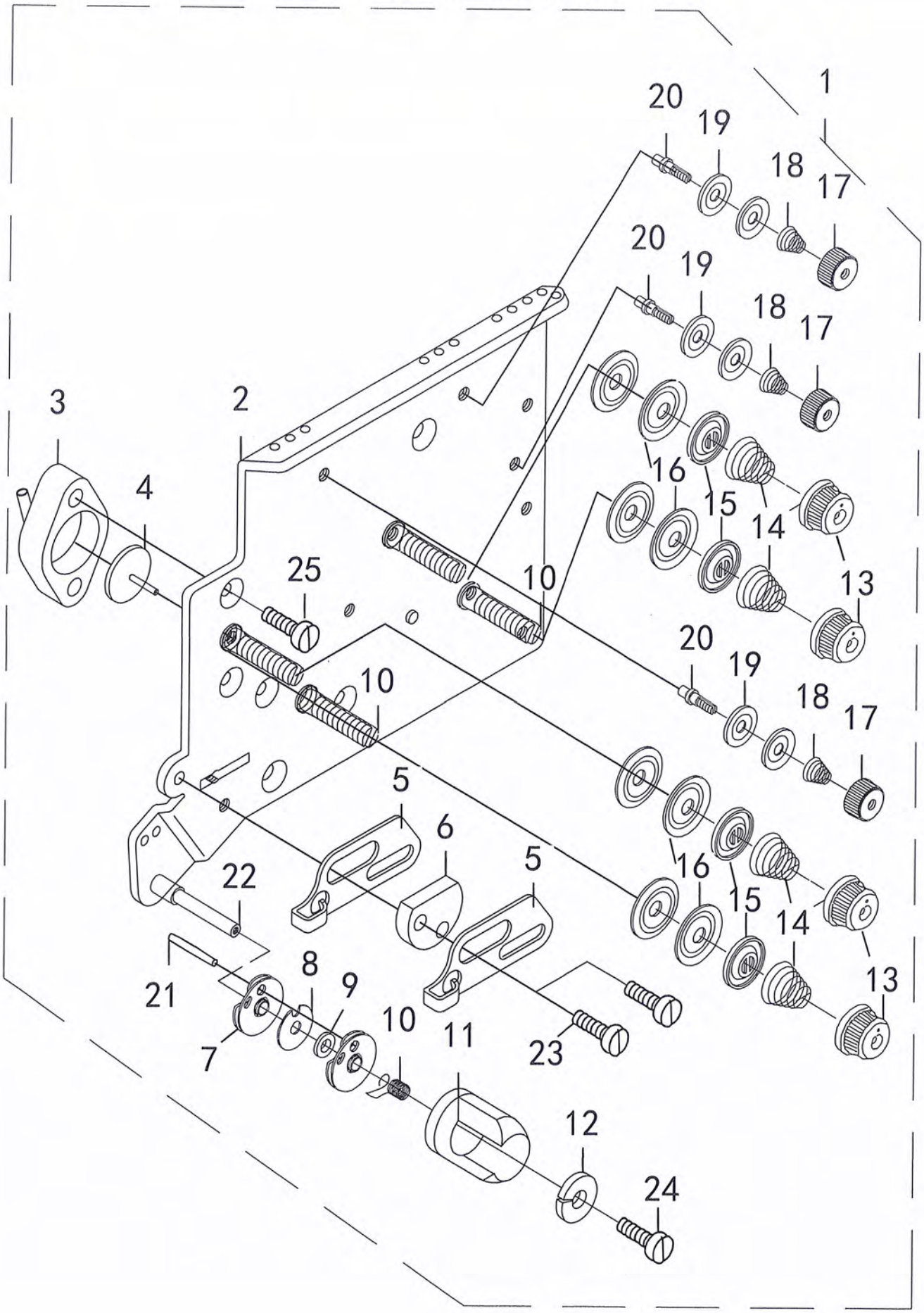

序号	说明	图号	编码及型号	英文名称	中文名称	数量
1		020840	020840	THREAD TENSION ASM.	夹线器组件	1
2		020841A	020841A	THREAD POST BASE COMPL.	底板	1
3		020841B	020841B	Cylinder block	气缸体	4
4		020841C	020841C	Cylinder thimble	气缸顶	4
5		020841D	020841D	Passing plate	过线件	2
6		020841E	020841E	Fixed block	过线件固定块	1
7		020841F	020841F	TAKE-UP SPRING GUIDE DISC ASM	挑线簧过线盘组件	2
8		020841G	020841G	PAD	垫	1
9		020841H	020841H	PAD	小垫	1
10		020841I	020841I	Torsion spring	扭簧	2
11		020841J	020841J	Torsion spring bracket	扭簧托	1
12		020841K	020841K	PAD	平垫	1
13		020841L	020841L	THREAD TENSION NUT	过线调节螺母	4
14		020841M	020841M	TENSION SPRING NO.1	过线夹线簧	4
15		020841N	020841N	BOBBIN WINDER TENSION DISC	夹线板压板	4
16		020841O	020841O	BOBBIN WINDER TENSION DISC	过线夹线板	8
17		020841P	020841P	TENSION NUT	夹线调节螺母	3
18		020841Q	020841Q	TENSION SPRING	夹线簧	3
19		020841R	020841R	TENSION DISC	夹线板	3
20		020841S	020841S	THREAD TENSION POST B	长过线桩	3
21		020841T	020841T	PIN	销	1
22		020841U	020841U	AXIS	挑线小轴	1
23		LS4C10	LS4C10	SCREW STUD	螺钉	2
24		LS4C8	LS4C8	SCREW STUD	螺钉	1
25		LS4N6	LS4N6	SCREW STUD	内六角花形螺钉	8

9.绕线装置(Lower thread winder mechanism component)

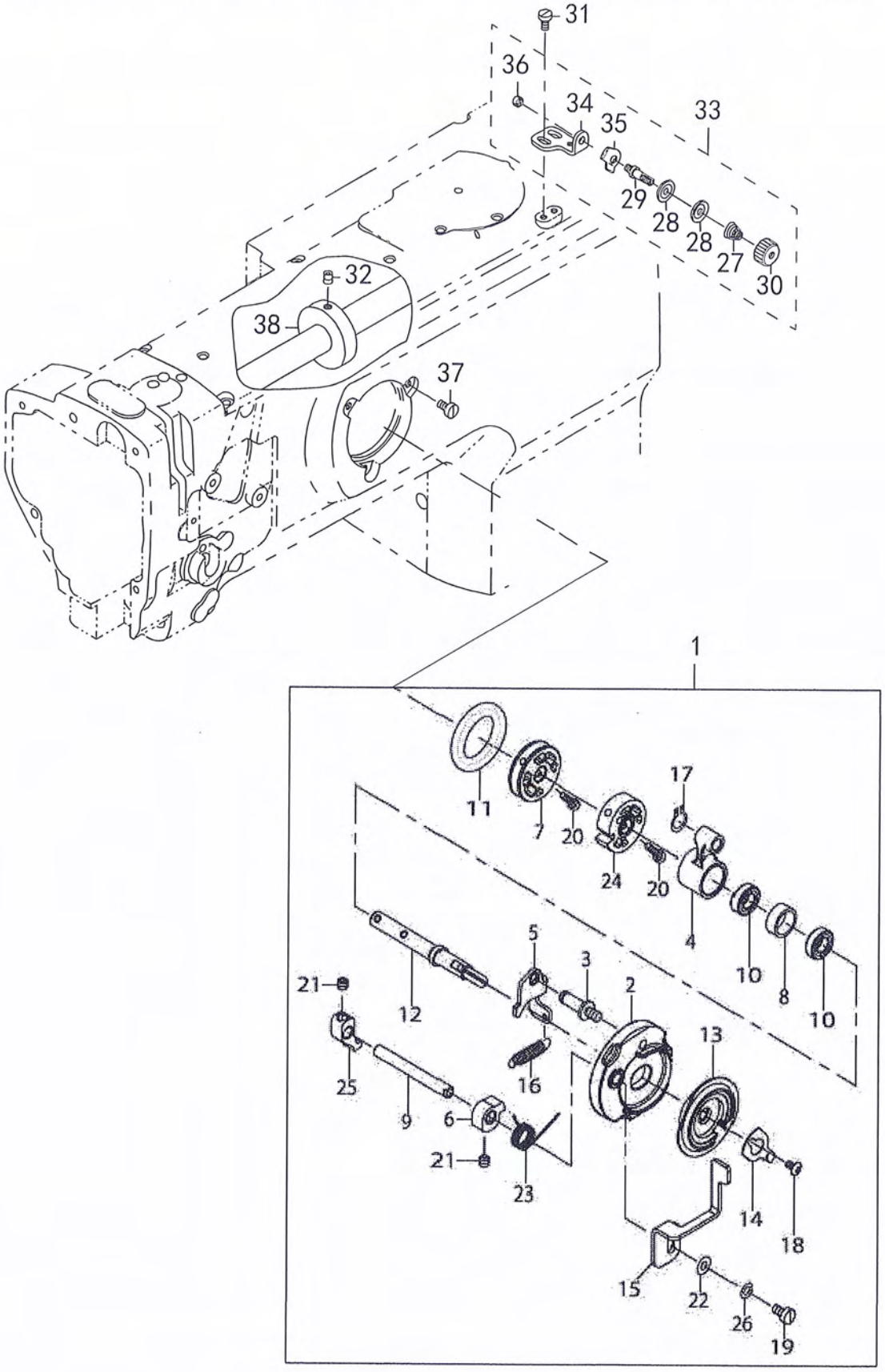

序号	说明	编码及型号	英文名称	中文名称	数量
1		40126355	BOBBIN DEVICE ASM.	绕线器组件	1
2		26260109	BOBBIN FITTING BASIS COMPL.	绕线座	1
3		26260307	ADJUSTING PLATE BEARING	绕线器调节板轴	1
4		26260406	CONNECTING ROD	绕线连杆	1
5		40126594	ADJUSTING PLATE	绕线器调节板	1
6		26260505	STOP MOVING CARD	止动卡	1
7		40125851	WHEEL SHAPE	轮毂	1
8		26260802	RING	挡圈	2
9		26261008	BEARING	轴	1
10		40126354	BEARING SHAFT	轴承	1
11		26261503	FRICTION RUBBER CIRCLE	摩擦胶圈	1
12		40126550	CENTER BEARING	中心轴	1
13		40125927	RUBBER MAT	胶垫	1
14		40126311	THREAD TRIMMER	断线刀	1
15		40151791	HANDLE	手柄	1
16		13718507	SPRING	拉簧	1
17		RC0560711KP	RING	弹性挡圈	1
18		SM0030601SC	SCREW 3*0.5 L=8	绕线器固定螺钉	3
19		SM6040860TP	SCREW4*8	螺钉	1
20		SM6031202TP	SCREW	螺钉	2
21		SM8050502TP	SCREW	紧定螺钉	1
22		WP0450801SP	FLAT MAT	平垫	2
23		40126549	SPRING	扭簧	1
24		40125928	POSITIONER	定位器	1
25		40125844	LIMITED CARD	限位卡	1
26		WS0451040KP	SPRING WASHER	弹垫	1
27		NS6110310SP	TENSION SPRING NO.1	过线夹线簧	1
28		D3168555H0B	BOBBIN WINDER TENSION DISC	过线夹线板	2
29		B3214047000	THREAD TENSION POST	过线桩	1
30		21378708	THREAD TENSION NUT	过线调节螺母	1
31		11072402	SCREW	小夹线固定螺钉	2
32		SM8050602TP	SCREW M5 L=6	梭芯绕线轮(上轴)螺钉	2
33		22538706	LOWER THREAD GUIDE ASM.	过线组件	1
34		21355706	FITTING BASE	底线过线架	1
35		D3162555B00	THREAD GUIDE	过线板	1
36		NS6110310SP	NUT 11/64-40	过线桩螺母	1
37		SS6110810TP	SCREW 11/64-40 L=8	绕线器固定螺钉	3
38		10704807	BOBBIN FRICTION WHEEL	梭芯绕线轮(上轴)	1

10、下轴装置（HOOK SHAFT & LOWER SHAFT COMPONENTS）

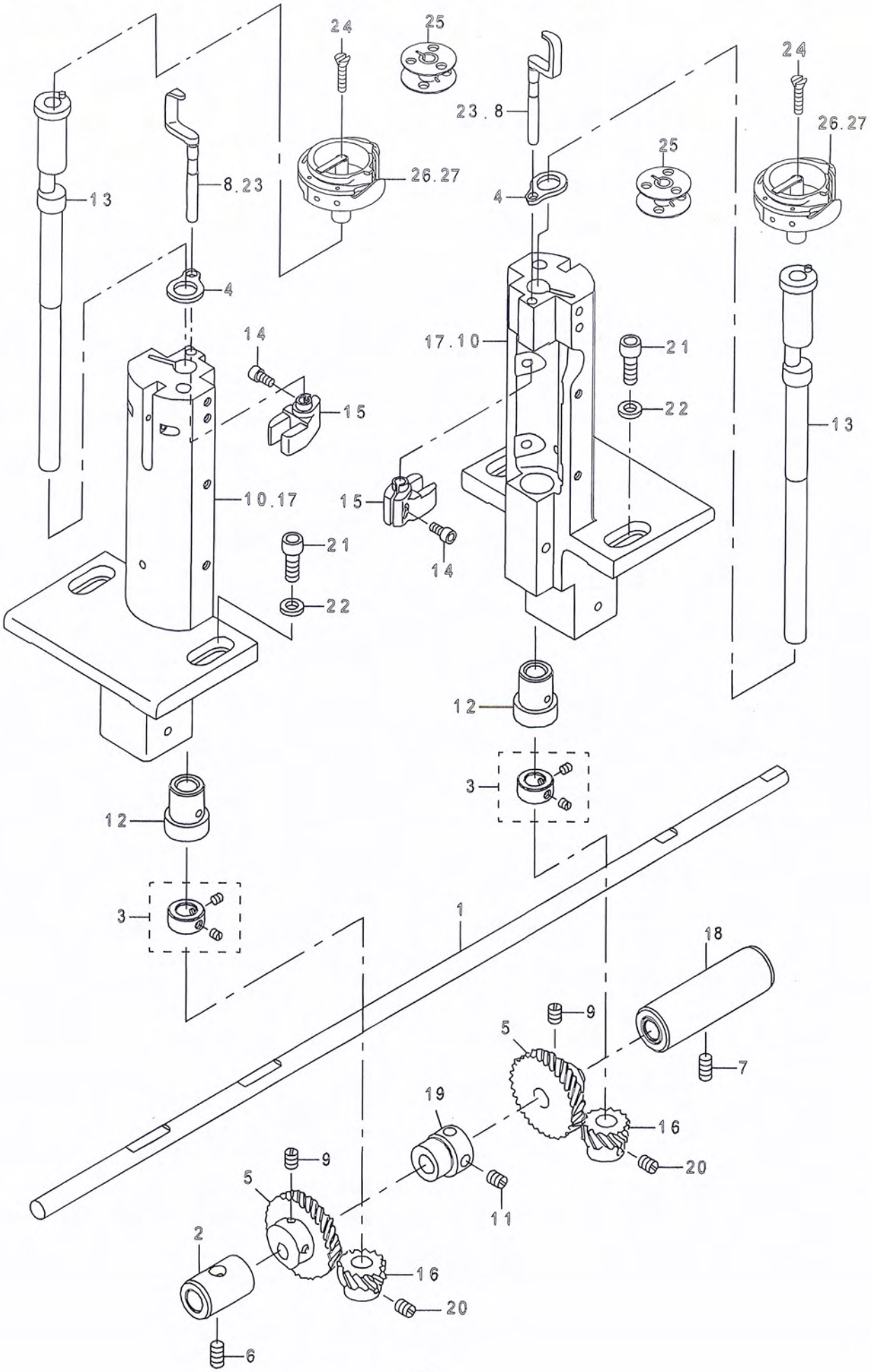

序号	说明	编码及型号	英文名称	中文名称	数量
1		020671	HOOK DRIVING SHAFT	下轴	1
2		21427307	LOWER SHAFT METAL REAR	下轴后套	1
3		CS095081ASH	THRUST COLLAR ASM. D=9.53 W=8	旋梭轴紧圈组件	2
4		23004708	HOOK SHAFT SPACER	双孔垫	2
5		B1816512000	HOOK DRIVING SHAFT LARGE	螺旋大齿轮	2
6		SS8151150TP	SCREW 15/64-28 L=10.5	螺钉15/64-28L=10.5	1
7		SS8151150TP	SCREW 15/64-28 L=10.5	螺钉15/64-28L=10.5	1
8	#01	40038829	OPENER	分线勾杆	2
9		SS8660810TP	SCREW 1/4-40 L=8	螺钉1/4-40 L=8	4
10	#01	40038867	HOOK SHAFT BASE	旋梭座	2
11		SS8150710TP	SCREW 15/64-28 L=7	按钮卡轮支头螺钉	2
12		21334701	HOOK SHAFT LOWER METAL	旋梭架下套	2
13		23004609	HOOK SHAFT	旋梭轴	2
14		SM6040802TP	SCREW M4X0.7 L=8	剪线电磁铁螺钉	2
15		23004906	OPENER GUIDE ARM	拨叉	2
16		10112001	HOOK SHAFT GEAR A	螺旋小齿轮	2
17	#03	40038724	HOOK SHAFT BASE	旋梭座(剪线)	2
18		40038697	BUSHING INTERMEDIATE ASM.	梭架右套组件	1
19		40068166	VERTICAL FEED CAD(2.4)	牙架升降凸轮	1
20		SS8660530TP	SCREW 1/4-40 L=4.5	按钮卡轮支头螺钉	6
21		LS6A16	SCREW M6 L=16	气缸安装螺钉	4
22		WP0612076SP	WASHER 6.1X11X2	垫片	4
23	#03	40039822	OPENER	分线勾杆(剪线)	2
24		SS1092810SP	SCREW 9/64-40 L=25.4	旋梭固定螺丝	2
25		10759603	ALUMINUM BOBBIN (DOUBLE-CUT)	线芯	2
26	#3	KRT68I-ICC-S	HOOK ASM.	梭床	2
27	#1	YRT16-26	HOOK ASM.	梭床	2

#1 FOR 1780L #03 FOR 1780-7

11、自动抬压脚装置(选配)（AUTOMATIC PRESSER LIFTING MECHANISM COMPONENTS）（OPTIONAL PARTS）

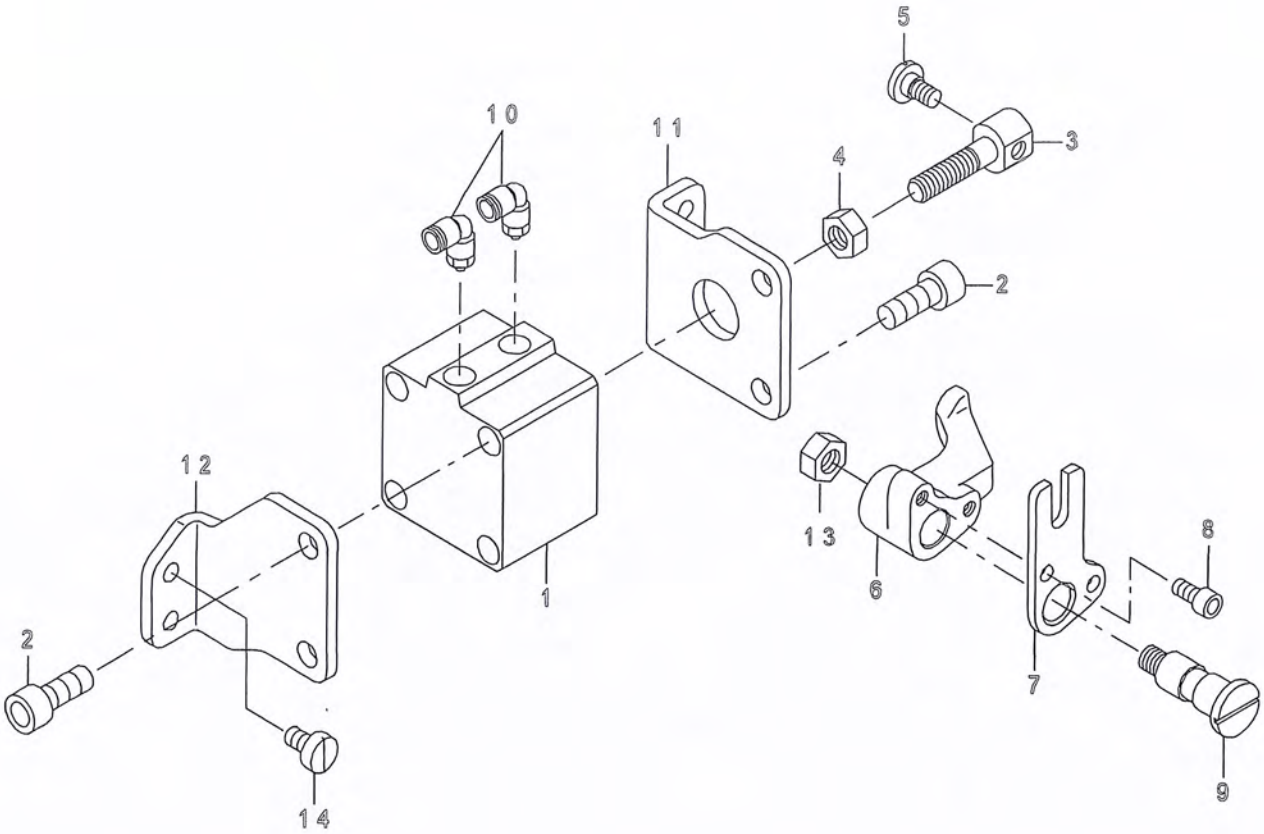

序号	说明	编码及型号	英文名称	中文名称	数量
1		PA400150100	AIR CYLINDER	抬压脚气缸M8	1
2		LS8A20	SCREW M8 L=20	气缸安装螺钉	4
3		21356506	CYLINDER CONNECTING SCREW	抬压脚气缸接头	1
4		LM8	NUT M8	螺母	1
5		SD0720331SP	HINGE SCREW D=7.24 H=3.3	抬压脚气缸接头螺钉	1
6		21388509	PRESSER LIFTER LEVER A	气动抬压脚曲柄	1
7		21356803	PRESSER LIFTER LEVER B	气动抬压脚拨叉	1
8		LS5A10	SCREW M5X0.8 L=10	拨叉固定螺钉	2
9		21356704A	SHAFT	气动抬压脚曲柄螺钉	1
10		SPL6-1	ELBOW UNION 6XPT1/8	螺纹接头	2
11		21356308	CYLINDER STAY(FRONT)	抬压脚气缸安装架（前）	1
12		21356407	CYLINDER STAY(REAR)	抬压脚气缸安装架（后）	1
13		21356704B	SCREW 5/16-T24	螺母5/16-24T	1
14		SS6151210SP	SCREW 15/64-28 L=10	螺钉	4

12. 供气装置（Air mechanism components）

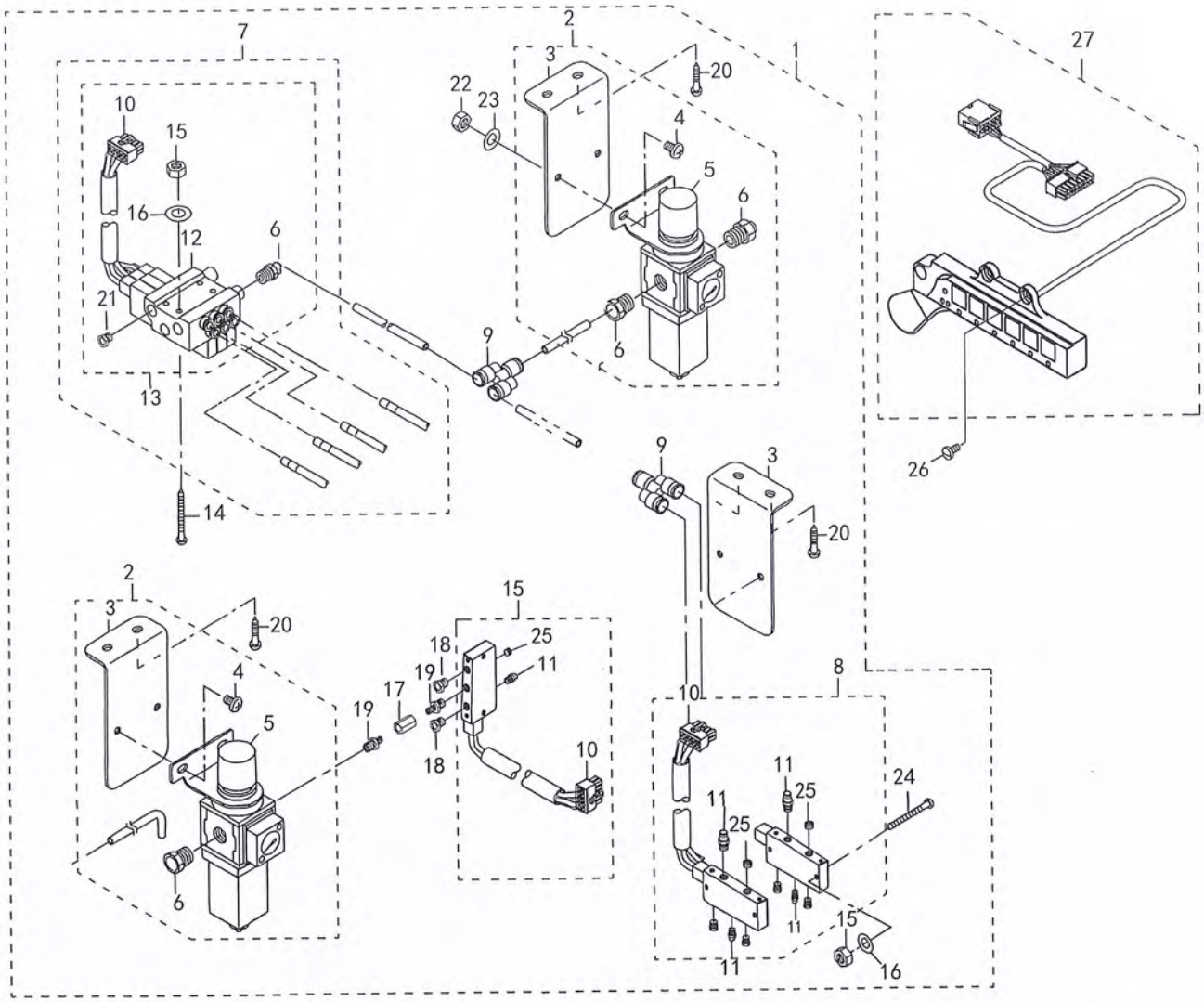

序号	说明	编码及型号	英文名称	中文名称	数量
1		022228	Air supply system	供气总系统	1
2		021701	AIR APPARATUS (B) ASM.	供气系统	2
3		40038723	Mounting panel	安装板	3
4		021704	SCREW M6 L=10	螺钉	4
5		AFR2000	FILTER REGULATOR	调压过滤器	2
6		SPC8-02	Pipe joint	管接头	6
7		021709	ELECTROMAGNETIC VALVE ASM.	气动控制系统	1
8		021709A	ELECTROMAGNETIC VALVE ASM.	气动控制系统	1
9		SPY8	Three way connector	三通接头	3
10		021710	RECEPTACLE	插头	<3>
11		SPC6-02	Pipe joint	管接头	3
12		200M-3F	Electromagnetic valve seat	三联电磁阀座	1
13		022227	ELECTROMAGNETIC VALVE (C) ASM.	气动控制组件	1
14		LS4A35	SCREW	螺钉	4
15		LM4	NUT	螺母	8
16		PD4	Flat washer	平垫圈	8
17		BL01	Long nut	双内牙铜接头	1
18		PST-01	muffler	消声器	6
19		BW01-02	Double end adapter	双外牙铜接头	2
20		SK3514000SC	SCREW D=4.1 L=20	木螺钉	6
21		PST-02	muffler	消声器	6
22		LM5	NUT	螺母	5
23		PD5	Flat washer	平垫圈	8
24		LS4A30	SCREW	螺钉	4
25		BD-02	Plug	堵头	7
26		SS7110710SP	SCREW	螺钉	3
27		021649	5RANGE SWITCH ASM.	六联按钮组件	1

13、自动倒缝装置（AUTOMATIC BACK COMPONENTS）

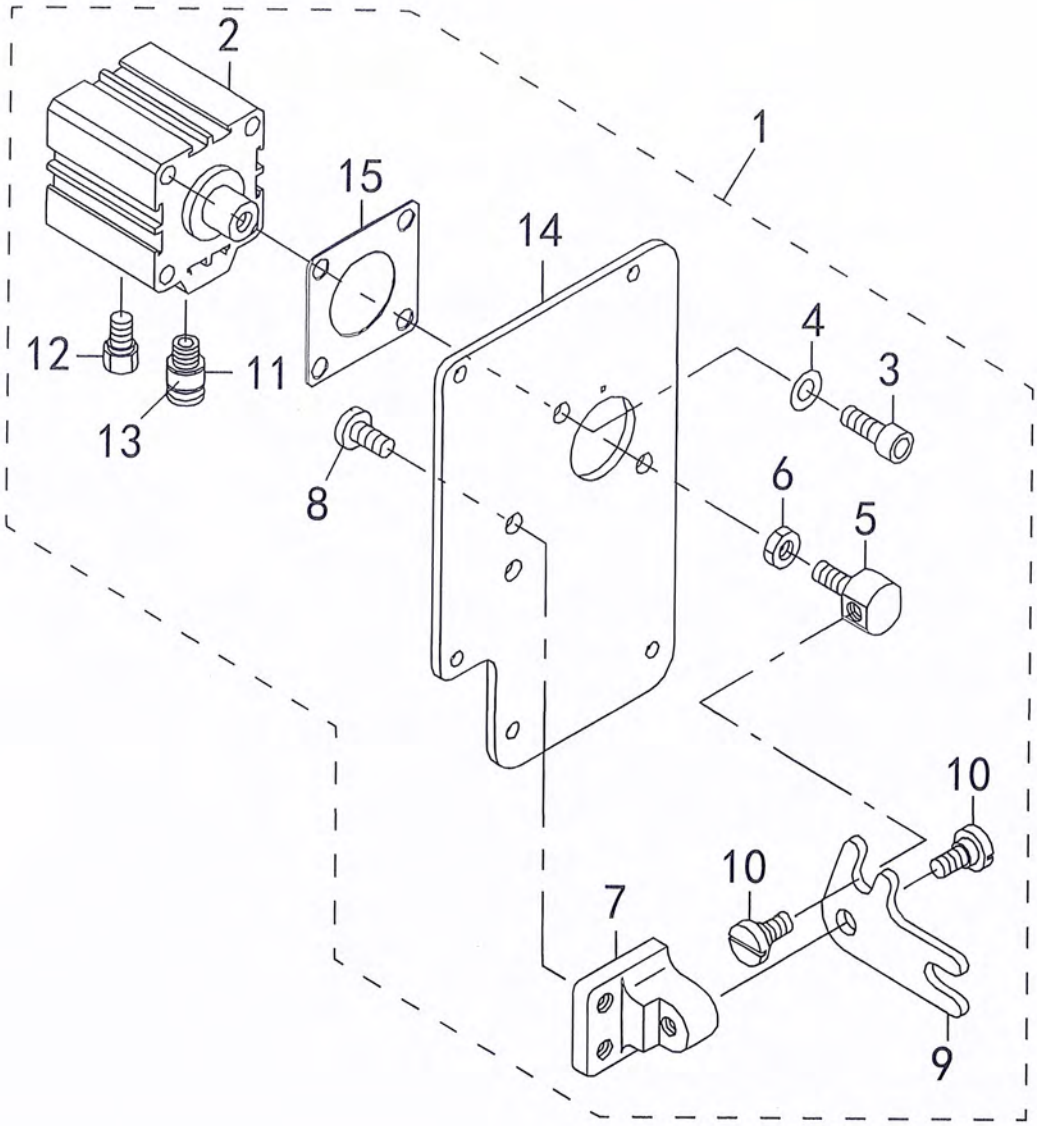

序号	说明	编码及型号	英文名称	中文名称	数量
1		40040660	WINDOW PLATE ASM.	倒缝气缸装置	1
2		PA320150200	JIG CYLINDER	倒缝气缸	-1
3		LA6A16	SCREW M6 L=16	气缸安装螺钉	-2
4		PD6	WASHER M6	垫圈	-2
5		21348602	CYLINDER CONNECTING SCREW	倒顺针距气缸传动螺钉	-1
6		LM6	NUT M6	螺母	-1
7		21348503	FITTING BASE	倒缝拨叉座	-1
8		SS7151210SP	SCREW 15/64-28 L=12	倒缝拨叉座螺钉	-2
9		21348701	BACKWARD FEED LINK	倒缝针距拨叉	-1
10		SD0800352SP	HINGE SCREW D=8 H=3.5	倒缝针距拨叉传动螺钉	-2
11		SPC6-1	HALF UNION	直接头	-1
12		PST01	MUFFLER	消音器	-1
13		HX002950000	WIRE MARK(1)	标签	-1
14		40043357	WINDOW PLATE H	大后窗盖	-1
15		21349105	CYLINDER PACKING	防油垫	-1

14、DL装置（DL MECHANISM COMPONENTS）

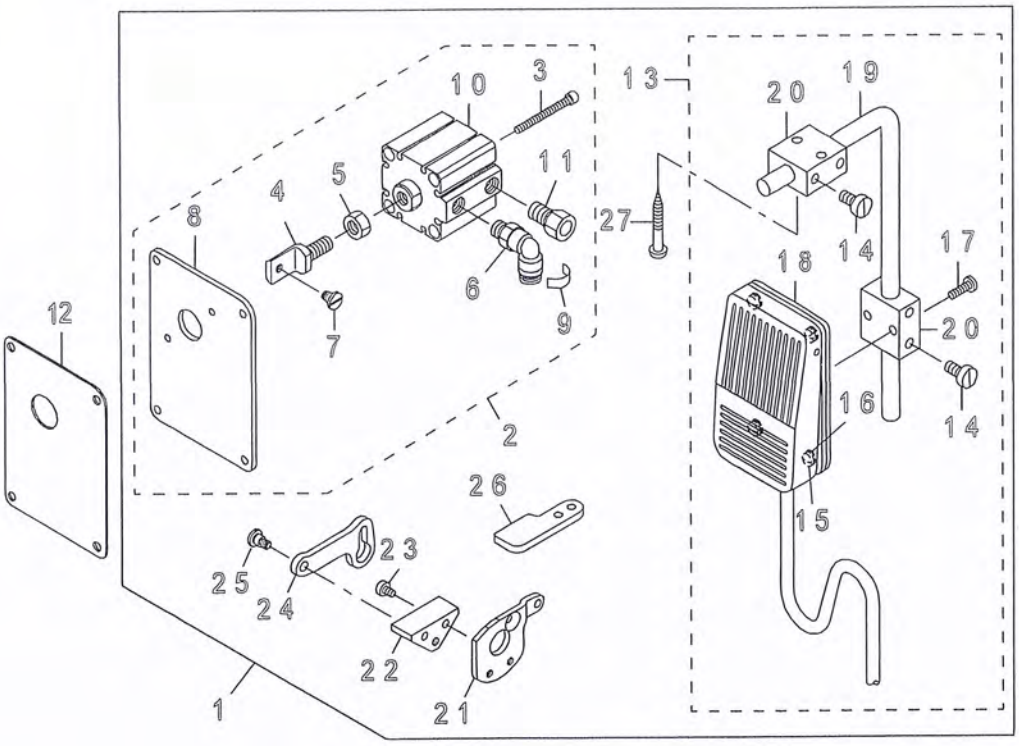

序号	说明	编码及型号	英文名称	中文名称	数量
1		40040416	OPTIONAL PARTS (DL)	DL系统	1
2		40040663	WINDOW PLATE ASM.	DL气缸装置	1
3		SM6044002TP	SCREW	气缸安装螺钉	-2
4		21438403	CYLYNDER CONNECTING SCREW	控制连接螺钉M6	-1
5		LM8	NUT M8	螺母	-1
6		SPL6-1	ELBOW UNION 6XPT1/8	弯接头	-1
7		SD0600403TP	HINGE SCREW	螺钉	-1
8		21437207	WINDOW PLATE F	后窗板	-1
9		HX00295000C	WIRE MARK(4)	气管标记	-1
10		PA320200100	JIG CYLINDER	气缸	-1
11		PST-01	MUFFLER	消音器	-1
12		21437306	WINDOW PLATE PACKING	油垫	1
13		40025036	KNEE SWITCH ASM.	膝控系统	1
14		LS5A16	SCREW 15/64-28 L=11.5	螺钉	-4
15		SS7110710SL	SCREW 11/64-40 L=7.0	螺钉	-4
16		WP0480856SP	WASHER 4.8X8.4X0.8	垫圈	-4
17		LS5A14	SCREW 11/64-40 L=14	螺钉	-2
18		GAKA14040A0	KNEE SWITCH A ASM.	膝控组件	-1
19		MAT80231T00	DRIVING BAR T002	驱动杆	-1
20		MAT80230T00	KNEE SWITCH SUPPORT BASE	膝控固定块	-2
21		21438106	STOPPER PLATE B	支架板	1
22		21438601	MUTUAL VERTICAL LINK SPASER	连接安装座	1
23		SS6110610TP	SCREW 11/64-40 L=6	螺钉11/64-40 L=6.5	2
24		21438502	MUTUAL VERTICAL LINK	连杆	1
25		SD0600454TP	SHOULDER SCREW	螺钉	1
26		21438205	UPPER FEED STOPPER PLATE	挡板	1
27		SK3514000SC	WOOD SCREW D=5.1 L=40	木螺钉	2

15、运油关系（LUBRICATION COMPONENTS）

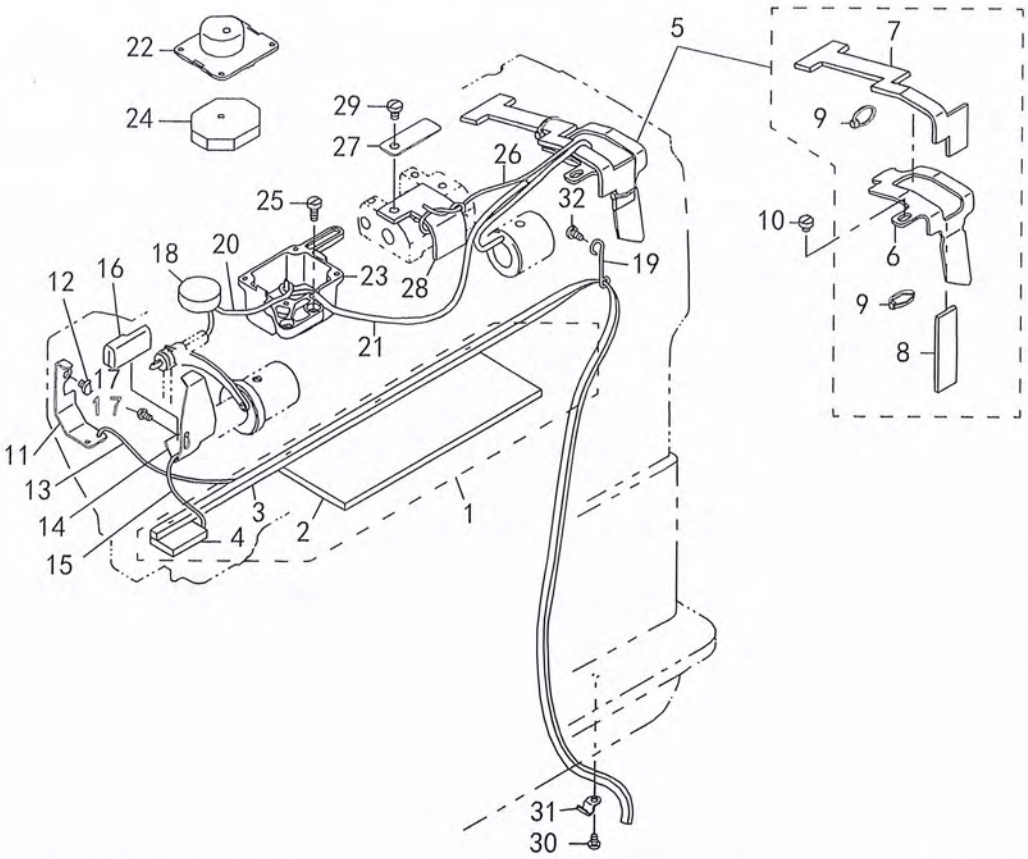

序号	说明	编码及型号	英文名称	中文名称	数量
1		40042648	ARM ONCE THROUGH FELT ASM.	机壳油毡组件	1
2		21345707	ARM ONCE THROUGH FELT A	机壳油毡A	-1
3		40042647	ARM ONCE THROUGH FELT	油毡B	-1
4		21345905	FACE ONCE THROUGH FELT	机壳油毡	-1
5		21346358	FELT SUPPORT ASM.	油毡支架组件	1
6		21346309	FELT SUPPORT	油毡座	-1
7		21346507	FEED CHANGE FELT	送料油毡	-1
8		21346408	FELT	油毡	-1
9		EA9500B0000	CLIP CV-70S	线卡	-2
10		SS7110710SP	SCREW 11/64-40 L=5	螺丝	1
11		21340708	UPPER FEED OIL BAR PLATE	上送料油板	1
12		SS7110510SP	SCREW 11/64-40 L=5	螺钉	1
13		CQ202000000	OIL WICK	油线	0.2
14		21347000	TAKE-UP OIL PLATE	挑线杆内板	1
15		CQ202000000	OIL WICK	油线	0.25
16		21347208	TAKE-UP LUBRICATION FELT	挑线杆润滑油毡	1
17		SS3090610SP	SCREW 9/64-40 L=6	螺钉	1
18		21346002	FELT	毛毡	1
19		22620504	OIL WICK HOLDER	油线支架	1
20		CQ252000000	OIL WICK	油线	0.55
21		BT0500300EA	OIL TUBE	油管	0.17
22		21407507	OIL TANK A	油箱A	1
23		21407606	OIL TANK B	油箱B	1
24		21407705	FELT	毛毡	2
25		SS6111010SP	SCREW 11/64-40 L=9.5	螺钉11/64-40 L=9.5	2
26		CQ202000000	OIL WICK	油线	0.15
27		21346101	LUBRICATION FELT PRESSER	油毡压片	1
28		21346200	MUTUAL VERTICAL CHANGE FELT	垂直油毡	1
29		SS7120760SP	SCREW 3/16-28 L=7.0	下轴轴承固定螺钉	1
30		SS4110615SP	SCREW 11/64-40 L=6	油管固定板螺钉	1
31		B3508512000	OIL FELT HOLDER	电线固定夹	1
32		SS7110710SP	SCREW 11/64-40 L=7	螺钉11/64-40 L=7	1

16、运油关系（LUBRICATION COMPONENTS）

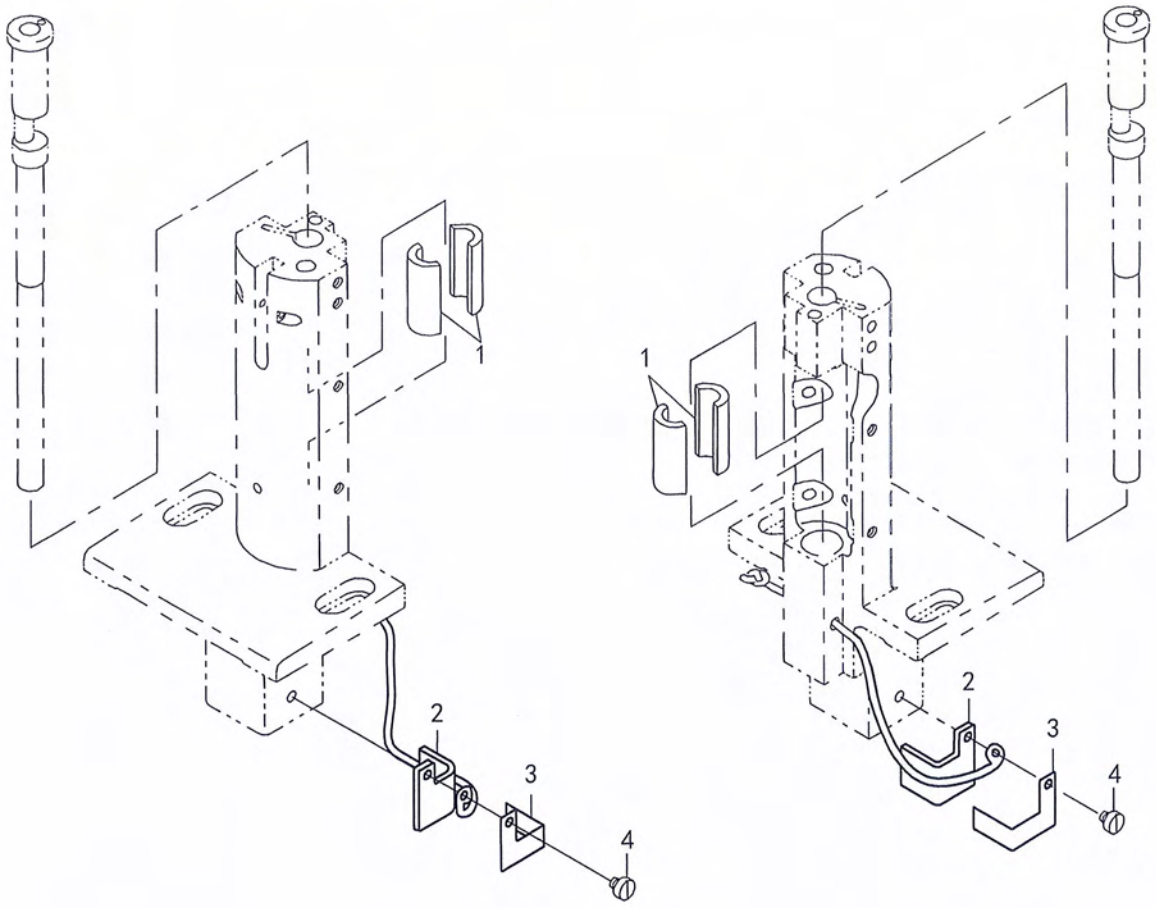

序号	说明	编码及型号	英文名称	中文名称	数量
1		21345905	FACE ONCE THROUGH FELT	机壳油毡	4
2		21346200	OIL WICK ASM.	油毡	2
3		40038712	VILENE HOLDER	油毡夹	2
4		LS4C8	SCREW 11/64-40 L=4.3	螺丝	2

17、针板及压脚部分（GAUGE COMPONENTS STANDARD PARTS）

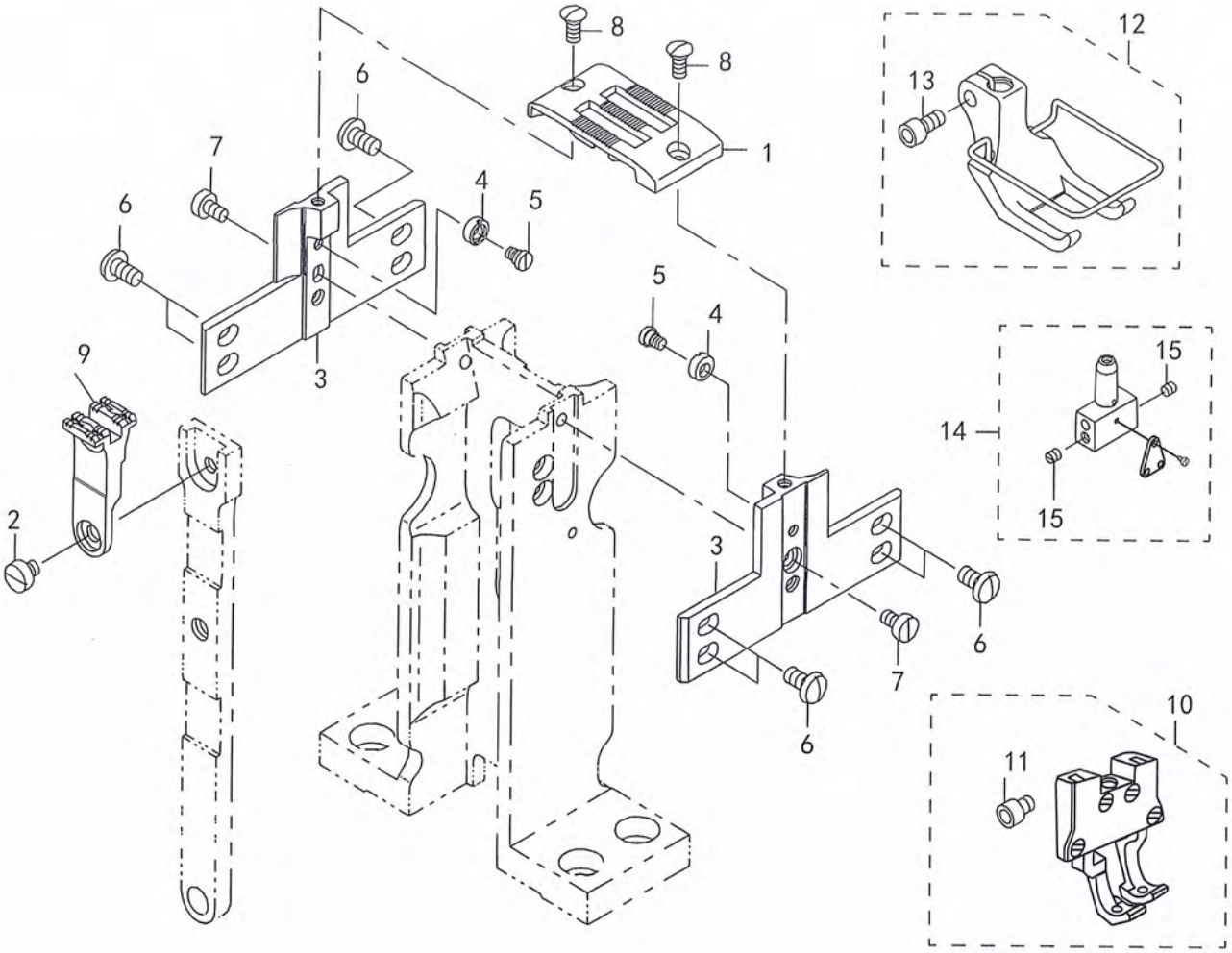

序号	编码及型号	英文名称	中文名称	数量
1	见附图7. 8.针板	NEEDLE PLATE	针板	1
2	SS6110480SP	SCREW 11/64-40 L=4.3	上牙螺丝	1
3	见附图11.针板座	THROAT PLATE HOLDER	针板座	2
4	23007503	ECCENTRIC ROLLER	偏心轮	2
5	23007602	HINGE SCREW	螺丝	2
6	LS4C8	SCREW 11/64-40 L=8	螺丝	8
7	SS6090620SP	SCREW 9/64-40 L=6	螺丝	2
8	SS2090810SP	SCREW 9/64-40 L=7.5	螺丝	2
9	见附图 9. 10.送布牙	FEED	送步牙10MM	1
10	见附图1. 2.内压脚	FEED FOOT ASM.	内压脚组件	1
11	LS4A6	SCREW M4 L=6	螺钉	-1
12	见附图3. 4. 5.外压脚	PRESSER FOOT ASM.	外压脚组件	1
13	LS4A8	SCREW M4X0.7 L=8	螺钉	-1
14	见附图 6.针头	NEEDLE CLAMP ASM.	针头组件	1
15	SS8080310TP	SCREW 1/8-44 L=2.8	螺丝	-2

附表：针位 （Needle guage）

1. 内压脚 (Top feeder)	2. 内压脚 (Top feeder)	3. 外压脚（气动中分） (Presser foot)
 1760E06A 6 mm 1760E08A 8 mm 1760E10A 10mm 1760E12A 12mm 1760E14A 14mm	 1760E306A 6 mm 1760E308A 8 mm 1760E310A 10mm 1760E312A 12mm	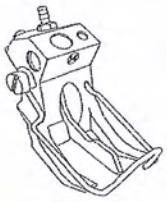 1760E306B-Q 6 mm 1760E308B-Q 8 mm 1760E310B-Q 10mm 1760E312B-Q 12mm
4. 外压脚（右靠边） (Presser foot)	**5. 外压脚 (Presser foot)**	**6. 针头 (Needle head)**
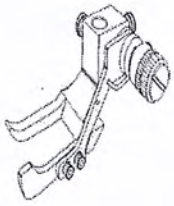 1760E06BR 6 mm 1760E08BR 8 mm 1760E10BR 10mm 1760E12BR 12mm 1760E14BR 14mm	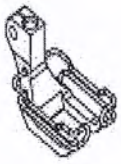 1760E06B 6 mm 1760E08B 8 mm 1760E10B 10mm 1760E12B 12mm 1760E14B 14mm	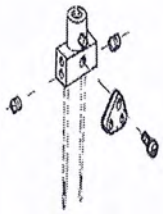 1760E06C 6 mm 1760E08C 8 mm 1760E10C 10mm 1760E12C 12mm 1760E14C 14mm
7. 针板 (Needle Plate)	**8. 针板（剪线） (Needle Plate (cut))**	**9. 送布牙（剪线） (Feed dog (cut))**
 1760E06D 6 mm 1760E08D 8 mm 1760E10D 10mm 1760E12D 12mm 1760E14D 14mm	 1760E06DJ 6 mm 1760E08DJ 8 mm 1760E10DJ 10mm 1760E12DJ 12mm 1760E14DJ 14mm	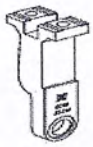 1760E06EJ 6 mm 1760E08EJ 8 mm 1760E10EJ 10mm 1760E12EJ 12mm 1760E14EJ 14mm
10. 送布牙 (Feed dog)	**11. 针板座 (Needle plate seat)**	
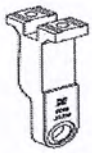 1760E06E 6 mm 1760E08E 8 mm 1760E10E 10mm 1760E12E 12mm 1760E14E 14mm	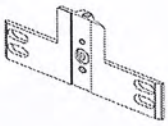 1760E06F 6 mm 1760E08F 8 mm 1760E10F 10mm 1760E12F 12mm 1760E14F 14mm	

18、油盆及护罩（BELT COVER & OIL RESERVOIR COMPONENTS）

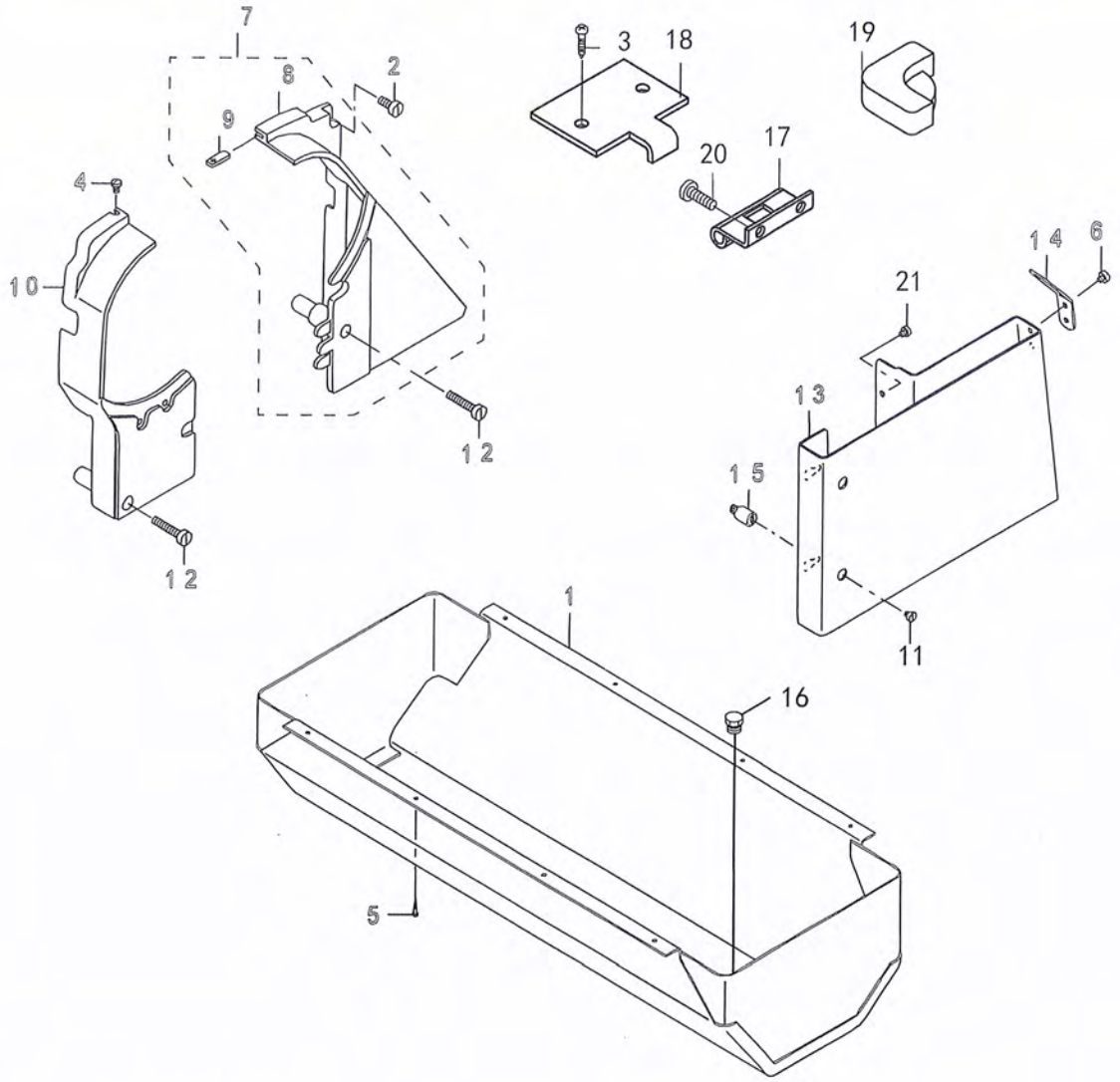

序号	说明	编码及型号	英文名称	中文名称	数量
1		021837	OIL RESERVOIR ASM.	大油盘	1
2		SS6151440SP	SCREW 15/64-28 L=14	螺钉15/64-28 L=14	1
3		SK3514000SC	SCREW D=4.1 L=20	木螺钉	4
4		SS5110740TP	SCREW 11/64-40 L=6.5	螺钉11/64-40 L=6.5	1
5		10539906	WOOD SCREW D=2.4 L=16	铁钉	8
6		SS7110710SP	SCREW 11/64-40 L=5	上牙螺丝	2
7		21351150	BELT COVER ASM. (RIGHT)	皮带罩组件(右)	1
8		21351101	BELT COVER (RIGHT)	皮带罩(右)	-1
9		21351002	BELT COVER AUXILIARY PLATE	皮带罩辅助板	-1
10		21351200	BELT COVER (LEFT)	皮带罩(左)	1
11		SS7110830SP	SCREW 11/64-40 L=7.5	螺钉	2
12		SS6153040SP	SCREW 15/64-28 L=30	螺钉15/64-28 L=30	2
13		40038823	BELT COVER (UNDER)	防护罩	1
14		40017309	BELT COVER LID	防护罩舌片	1
15		40038824	BELT COVER STUD	防护罩连接螺钉	2
16		021841	Oil plug	油塞	1
17		033034	COACH	背扣	2
18		033035	PLATE	压板	2
19		204LJ907010050	RUBBER PAD	角胶	2
20		LS6A12	SCREW	螺钉	4
21		LS4C8	SCREW	螺钉	2

19. 气管连接图

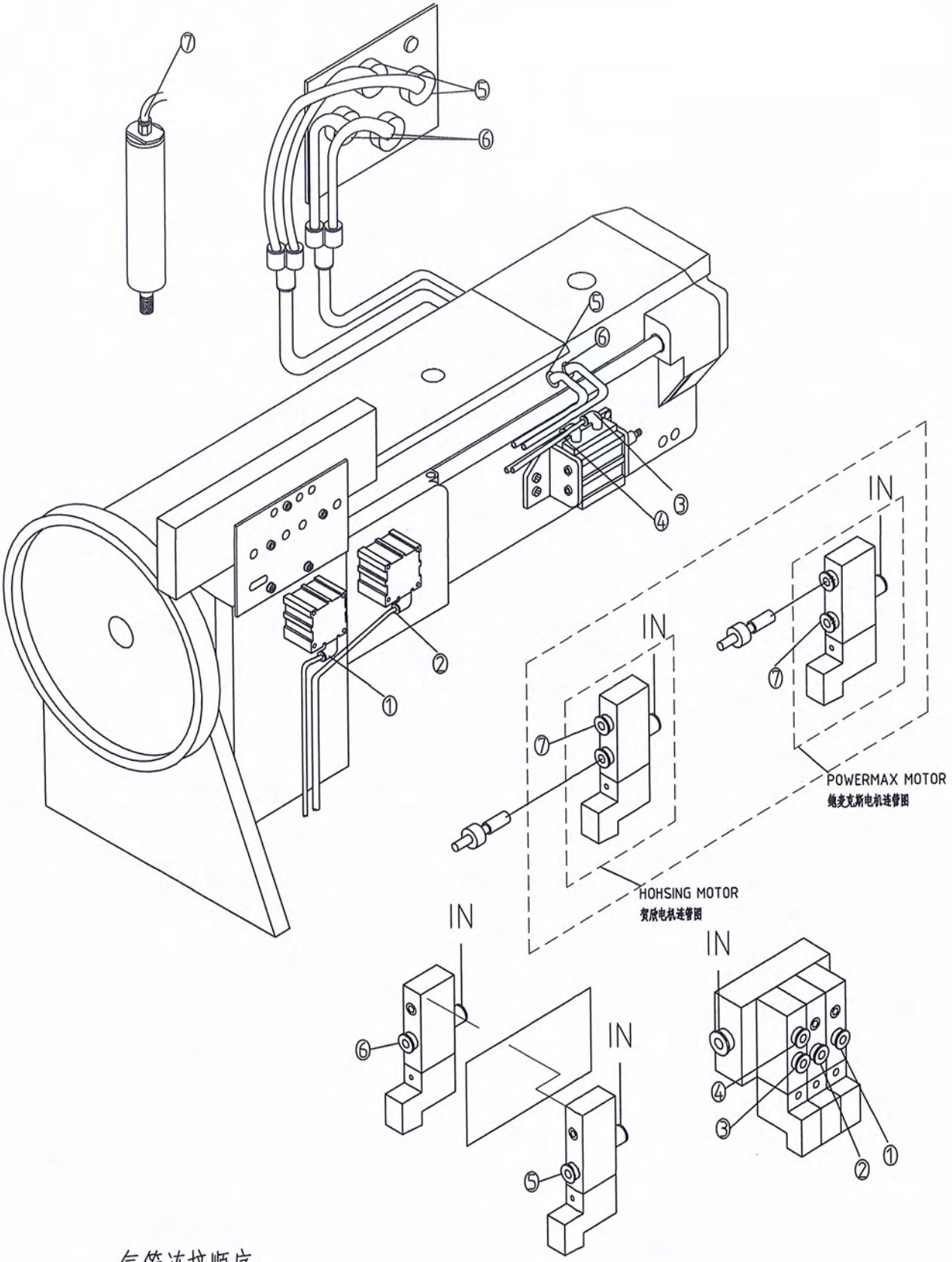

气管连接顺序:

①-① ②-② ③-③ ④-④ ⑤-⑤ ⑥-⑥ ⑦-⑦

20. CP组件

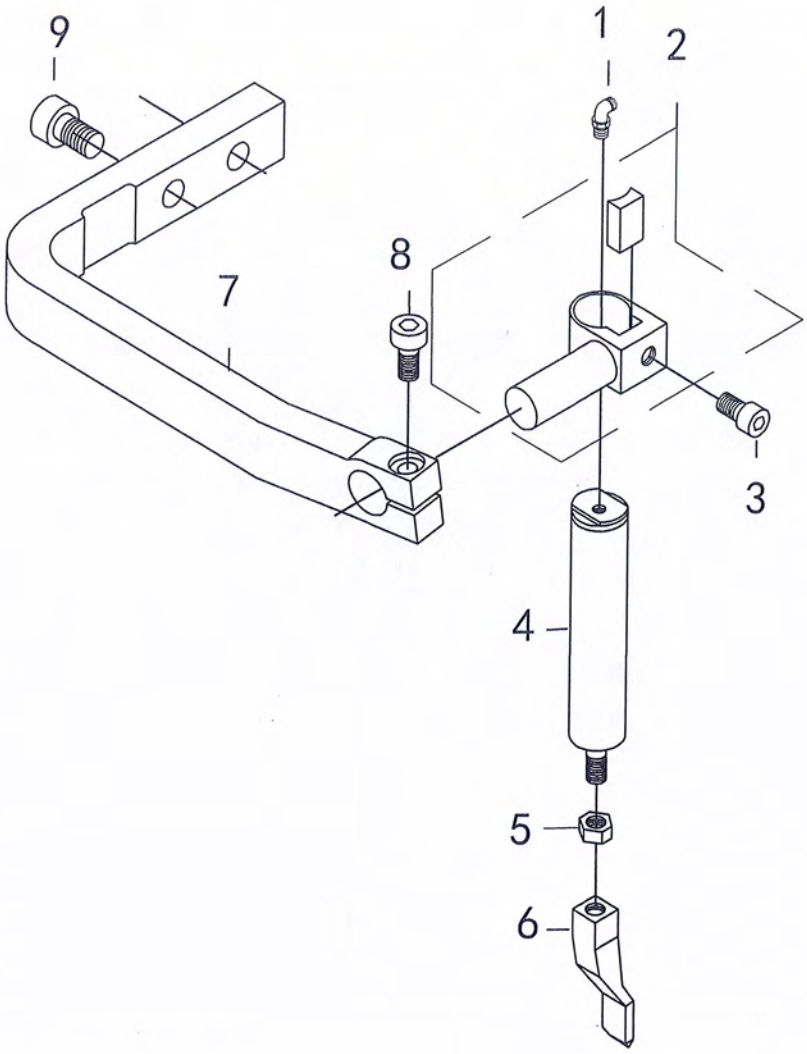

序号	说明	图号	编码及型号	英文名称	中文名称	数量
1		SPL4-M5	SPL4-M5	Pipe joint	螺纹弯通管接头	1
2		1760CP03	1760CP03	Cylinder clamp	气缸夹件杆	1
3		LS6A10	LS6A10	SCREW	内六角圆柱头螺丝	1
4		QG16B30A	QG16B30A	Cylinder	伸出式单作用气缸	1
5		LM6	LM6	NUT	螺母	1
6		1760XLCP02	1760XLCP02	Positioning parts	定位刀	1
7		1760XLCP01	1760XLCP01	Seat	后装座	1
8		LS6A16	LS6A16	SCREW	内六角圆柱头螺丝	1
9		040543	040543	SCREW	螺钉15/64-28T L=11	2