GLOBAL

US 35800

Instruction & parts manual

www.globalsew.com

info@globalsew.com

SAFFTY RULES

1. Before putting the machines described in this manual into service,carefully read the instructions.The starting of each machine is only permitted after taking notice of the instructions and by qualified operators. IMPORTANT! Before putting the machine into service,also read the safety rules and instructions from the motor supplier.
2. Observe the national safety rules valid for your country.
3. The sewing machines described in this instruction manual are prohibited from being put into service until it has been ascertained that the sewing units which these sewing machines will be built into,have conformed with the EC Council Directives (89/392/EEC,Annex 11 B).
4. All safety devices must be in position when the machine is ready for word or in operation.Operation of the machine without the appertaining safety devices is prohibited.
5. Wear safety glasses.
6. In case of machine conversions and changes all valid safety rules must be considered.Conversions and changes are made at your own risk.
7. The warning hints in the instructions are marked with one of these two symbols:

8. When doing the following the machine has to be disconnected from the power supply by turning off the main switch or by pulling out the main plug:
   8.1 When threading needle(s),looper,spreader etc.
   8.2 When replacing any parts such as needle(s), presser foot, throat plate, looper, spreader, feed dog, needle guard,folder,fabric guide etc.
   8.3 When leaving the workplace and when the workplace is unattended.
   8.4 When doing maintenance work.
   8.5 When using clutch motors without actuation lock,wait until the motor is stopped totally.
9. Maintenance,repair and conversion work (see item 8)must be done only by trained technicians or special skilled personnel under consideration of the instructions.

10. Any work on the electrical equipment must be done by an electrician or under direction and supervision of special skilled personnel.
11. Work on parts and equipment under electrical power is not permitted. Permissible exceptions are described in the applicable sections of standard sheet DIN VDE 0105.
12. Before doing maintenance and repair work on the pneumatic equipment, the machine has to be disconnected from the compressed air supply. In case of existing residual air pressure, after disconnecting form compressed air supply (I,e.pneumatic equipment with air tank),the pressure has to be removed by bleeding.

Contents

1	Identification of the machines	1
2	Class description	1
3	Style of machines	1
4	Illustrations	2
5	Identifying parts	3
6	Needles	3
7	Description	3
8	Terms	3
9	Needles	4
10	Lubrication	4
11	Threading	7
12	Adjusting instructions	7
13	Torque requirements	7
14	Synchronising needle and looper motions	7
15	Tightening needle head	9
16	Aligning needles in throat plate slots	10
17	Centering the cylinder	10
18	Setting the looper	10
19	Setting the looper (cont)	11
20	Setting height of needle	11
21	Setting the feed dog for plain feed	12
22	Setting the feed dogs for differential feed	12
23	Setting the feed dogs for differential feed (cont)	13
24	Changing stitch length	14
25	Setting rear needle guard	14
26	Presser foot and presser bar adjustment	15
27	Upper feed roller adjustment	16
28	Upper feed roller adjustment (cont)	16
29	Thread tension and release	17
30	Differential control	18
31	Setting needle thread take up and frame eyelet	18
32	Looper thread take-up adjustment	18
33	Folder adjustment	19
34	Air blower tube adjustment	19
	Main frame, cast-off plate, eyelets, miscellaneous covers and bushings.....	20
	Folder, cylinder covers and bushings for differential feed	24
	Folder, cylinder covers and bushings for plain feed	28
	Detachable head assembly	32
	Oiling, needle lever, crankshaft and main shaft parts ...	36
	Plain feed bar, feed lift & feed drive components for plain feed	38
	Differential feed bar, main feed bar, feed lift eccentric assembly for differential feed	40
	Loopers, looper holders, feed drive components and looper avoid components for differential feed	48
	Upper roller feed, foot lifter and thread tension parts....	50
	Pulley, crank shaft, clutch and clutch driving mechanism	54
	Sewing parts.....	58
	Thread stand	60
	Accessories	62

IDENTIFICATION OF MACHINES

Each machine is identified by a style number which is stamped into the style plate affixed to the middle of the machine under the tension assembly.
The serial number is stamped in the casting at the right rear base of the machine.

CLASS DESCRIPTON

High speed,Feed-off-The-Arm High Throw Machines,Two and Three Needle,Left Needle In Front.Light Weight Presser Bar Mechanism,Adjustable Looper Avoid,Space In Front of Needles8"(203.2mm),Single Disc Looper Thread Take-up,Automatic Enclosed Type Oiling System and Filter Type Oil Pump,Visual Sight Oil Action and Supply Gauges.

STYLE OF MACHINES

35800DNU DOUBLE LAP SEAM .Three needle, high capacity ,differential feed with upper driven roller feed (.468WIDE).-Typical Application-For in and out seaming on heavy weight denim garments.Seam Specification 401 LSC-3.Standard gauge Numbers 8(1/8",3.2mm) and 9 (9/64",3.6mm).Recommend needle 130GS,size 140/054.Maximum recommended speed 4500R.P.M...094 step sewing parts. 468(15/32,11.9mm)narrow roller.

35800DRU DOUBLE LAP SEAM.Three needle,high capacity,plain feed,upper feed,upperdriven, rollerfeed,FeedDogshave higher teeth on front.-Typical Application-For seat seaming,in and out seams on medium to heavy weight denim garments.Seam Specifications 401LSC-3,Standard gauge Numbers 8(1/8",3.2mm)and 9(9/64",3.6mm),Recommended needle 130GS.size 140/054.Maximum recommended speed 4500R.P.M...094 step sewing parts... 468(15/32.11.9mm) narrow roller.

ILLUSTRATIONS

This manual has been arranged to simplify ordering repair parts.Exploded views of various sections of the mechanism are shown so that the parts may be seen in their actual position in the machine. On the page opposite the illustration will be found a listing of the parts with their part numbers,description and the number of pieces required in the particular view being shown.

Numbers in the first column are reference numbers only ,and merely indicate the position of the part in the illustration.The reference number should never be used in ordering parts. Always use the part number listed in the second column.

Component parts or sub-assemblies which can be furnished for repairs are indicated by indenting their descriptions under the description of the main sub-assembly.As an example refer to the following text:

9	A3588-314	Gasket	3
10	A3588-373	Screw	4
11	A3588-082	Top Cover,front	1

It will be noted in the previous example that the cam follower ,bushing and cam guide and the upper looper drive shaft are not listed.The reason is that replacement of these parts individually is not recommended ,so the complete upper looper,drive shaft assembly should be ordered.

When a part is common to all machines covered in this manual,no specific usage will be mentioned in the description.However,when the parts for the various machines are not the same,the specific usage will be mentioned in the description and ,if necessary,the difference will be shown in the illustration.

IDENTIFYING PARTS

Where the construction permits,each part is marked with its part number.On some of the smaller parts and on those where construction does not permit,an identificati-On does not permit,an identification letter is marked in to distinguish the part from similar ones.

PLEASE NOTE: Part numbers represent the same part ,regardless of which manual they appear. On all orders please include part number ,name and style of machine for which the art was ordered.

NEEDLES

Each needle has both a type and size number. The type number denotes the kind of shank , point, length, groove finish and other details. The size number,stamped on the needle shank, denotes the largest diameter of the blade measured between the shank and the eye. Collectively the type number and size number represent the complete symbol which is given on the label of all needles packed and sold by our company .

DESCRIPTION

130GS Short,double groove,struce groove,ball eye ,spotted, government point ,chromium plated-
Size available 080/032,090/036,100/040,110/044,125/049,140/054,150/060.
To have needles promptly and accurately filled, an empty package ,a needle sample ,or the type and size number should be forwarded. Use the description on the label . A complete order should read as follows: 100 needles,type 130GS,size 125/049".

TERMS

Prices are net cash and subject to change without notice. A charge is made to cover postage and insurance.

Needle Type	Description	Sizes Available
130GS	Short double groove,struck groove,ball eye,spotted,government point,chromium plated.	080/032, 090/036 100/040,125/049 140/ 054, 150/060

Table 1

NEEDLES

Selection of proper needle size is determined by size of thread used ,Thread should pass freely through the needle eye in order to produce a good stitch formation.

Each needle has both a type and size number.The type number denotes the kind of shank ,point ,length, groove,finish and other details.The size number,stamped on the needle shank,denotes largest diameter of blade,measured midway between shank and eye.Collectively, type and size number represent the complete symbol which is given on the label of all needles packaged and sold by our company . See " STYLE OF MACHINES" for the standard recommended needle type & size for your machine .

To have needle orders promptly and accurately filled ,an empty package ,a sample needle ,or the type and size number should be forwarded.Use the description on the label .A complete order would read: " 1000 Needles,Type 130GS,Size140/054".

LUBRICATION

The oil has been drained from the machine before shipping and the reservoirs must be filled before beginning to operate. Use a straight mineral oil with a Saybolt viscosity of 90 to 125 seconds at 100° Fahrenheit. Part No.28604R.

Oil is filled at oil caps (A&D,Fig.1).The level is checked at sight gauges(B) and (E).Maintain the oil level between the red lines of the gauges.

The machine is equipped with a continuous running rotary driven oil pump.The action of the oil can be observed through oil sight(A) and (D) in the front and back top covers.

THREADING & OILING FOR PLAIN FEED

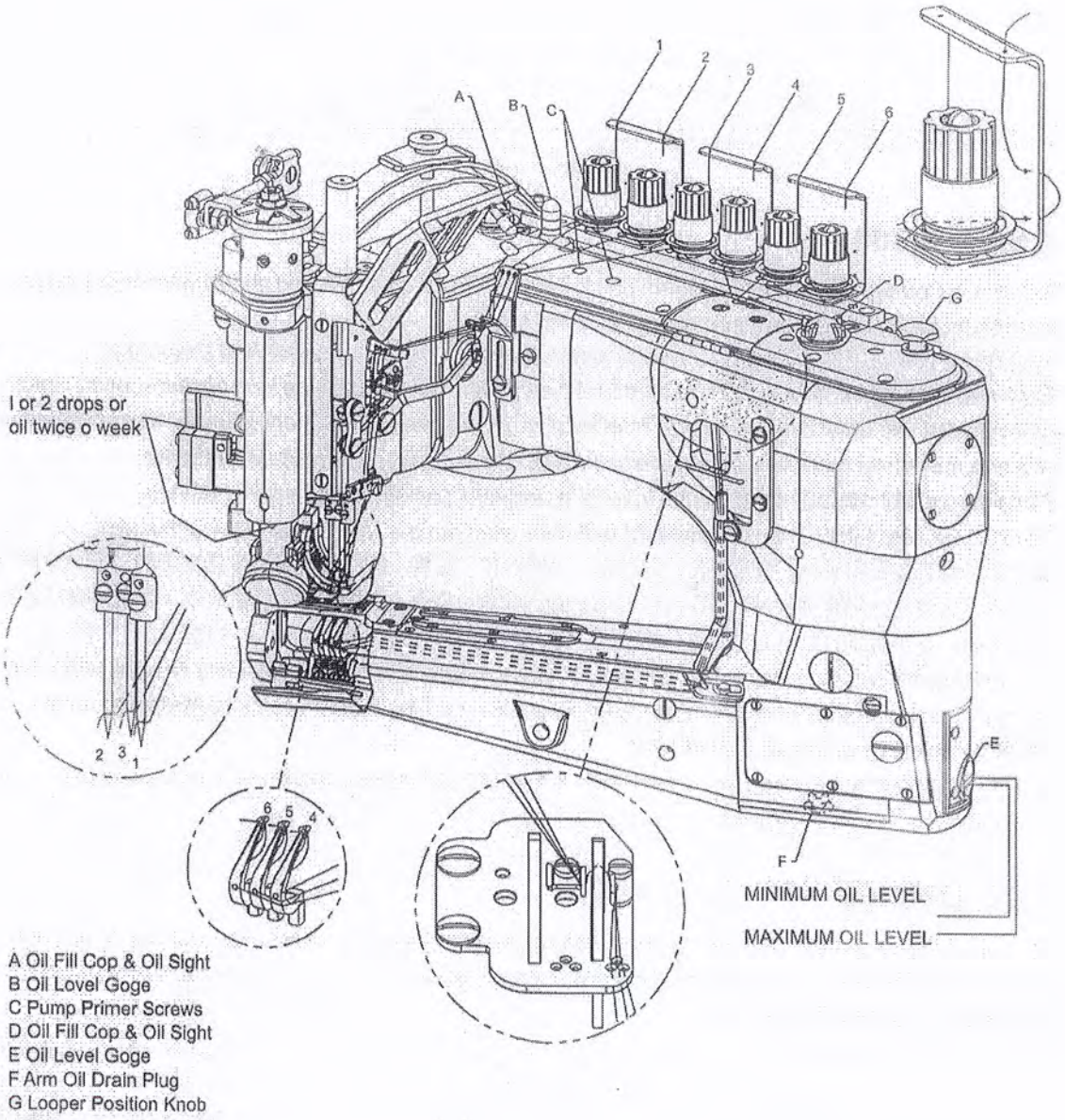

FIG.1

THREADING & OILING FOR DIFFERENTIAL FEED

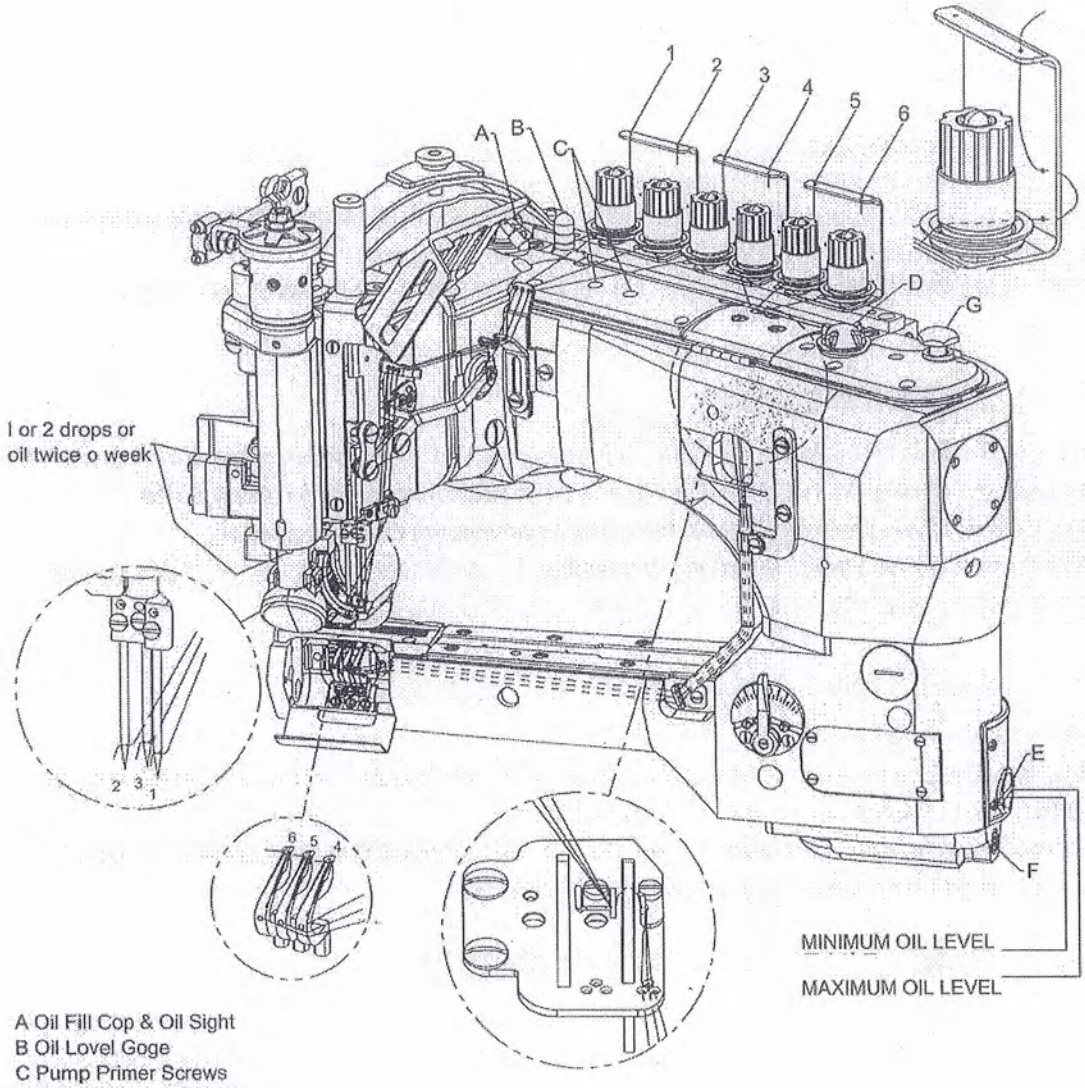

A Oil Fill Cop & Oil Sight
B Oil Lovel Goge
C Pump Primer Screws
D Oil Fill Cop & Oil Sight
E Oil Level Goge
F Arm Oil Drain Plug
G Looper Position Knob

FIG.1

When starting a new machine, beginning filling the reservoirs of when beginning to operate a machine that has been idle for some time , it may be necessary to prime the pump. To do this ,remove the two plug screws(C).Apply oil to these holes and operate machine until bubbling can be observed at the windows .Replace screws(C).

CAUTION: If oil does not bubble when machine is running , the circulating pump is inoperative.

Oil may be drained from the machine at two places ,plug screw(F)located in the bottom of the cylinder and plug screw(G)at the back of the main frame below the handwheel.

THREADING

A convenient means for threading the looper has been provided.When loopers are at the left end of their travel,press the knob(H,Fig.1) and loopers will back out of position,leaving them easily accessible . Thread the machine as illustrated in (Fig.1).After threading ,push loopers back into position.

ADJUSTING INSTRUCTIONS

NOTE: Instructions stating direction of location ,such a sright, left, front or rear of machine ,are given relative to operator's position at the machine .The handwheel rotates counterclockwise ,in operating direction ; when viewed from the right end of machine.

TORQUE REQUIREMENTS

Torque specifications gives in this catalog are measured In inch-pounds or Newton-meters.All straps and eccentrics must be tightened to 19-21in .lbs.(2.1-2.3Nm)Unless otherwise noted.All nuts,bolts,screws, etc,without torque specifications must be secured as tightly as possible,unless otherwise noted.Special torque specifications for connecting rods,links,screws etc..are shown on the parts illustrations.

SYNCHRONIZING NEEDLE AND LOOPER MOTIONS

NOTE: Needle and looper mechanisms are carefully synchronized with precision gauges before leaving the factory to insure the best possible sewing conditions.

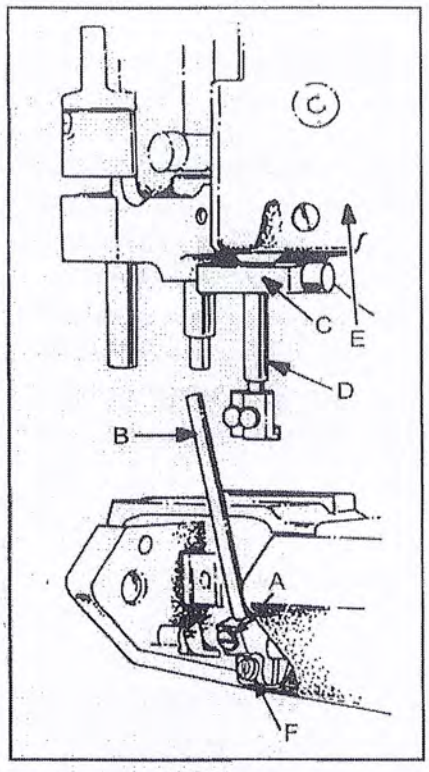

FIG.2

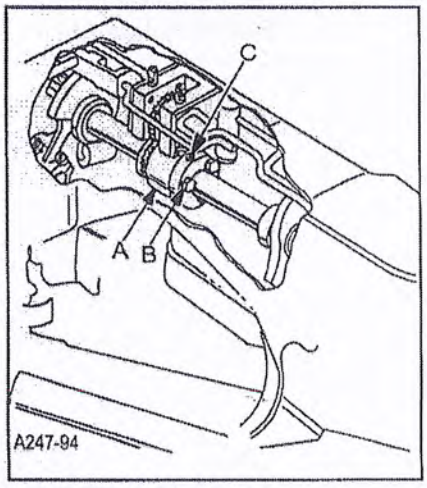

FIG.3

Should it become necessary to disassemble the main shaft or replace components of the needle or looper drive mechanisms, re-synchronization of the machine will be required to facilitate proper sewing adjustments.This is accomplished by means of an adjustable split coupling located beneath the rear top cover, connecting the crankshaft to the main shaft,which in turn drives the looper mechanism.

To synchronize the machine,remove the needles,presser foot, throat plate,feed dogs and upper feed roller mechanism.Rotate handwheel in the operating direction until the needle bar is at the bottom of its stroke and just begins its upward travel .Loosen screw(A,Fig.2) and remove the looper for the left hand needle from the looper holder.Insert a straight steel rod (B)5/32"(3.9mm) or 11/64"(4.3mm) diameter by 2-1/2"(63.5mm) long into looper holder and retighten screw(A).Rotate the handwheel until the rod (B) is at the extreme left and reinstall the throat plate. Loosen screw(F)in looper holder and move the holder left or right until the right side of the rod is approximately 5/32"(4.0mm) from the left edge of the throat plate,tighten screw(F).Turn the handwheel in the operating direction ,with needle bar rising until rod(B)comes in contact with the edge of the throat plate.At this point,clamp timing gauge No.TT147(C)around the needle bar (D),flush against the underside of the machine casting(E).Rotate handwheel in the opposite direction until needle bar or the rod contacts the edge of the throat plate.Maximum allowable clearance between gauge and casting or rod and throat plate is .005"(0.1mm).

If machine is not synchronized the following applies:

Both ends of the adjustable split coupling are secured to the crankshaft and main shaft by spot screws and set screws.On the main shaft end of the coupling(A,Fig.3)three screws(B) thread horizontally through the coupling . The holes in the main shaft end of the coupling are larger than the diameter of the screws, permitting several degrees of rotation in either direction to properly synchronize the needle and looper. Loosen the three horizontal clamp screws(B,Fig.3).With rod (B.Fig.2)at its farthest position to the left , snug the uppermost horizontal clamp screw enough to hold coupling (A.Fig.3)in position,If the handwheel is turned in reverse of operating direction and gauge(C.Fig.2)on needle bar (D)contacts the machine casting(E)before rod(B)contacts the edge of the throat plate loosen horizontal clamp screw(B.Fig.3) which was snug ,while holding the coupling in place with an Allen wrench in set screw(C).Rotate the handwheel slightly in reverse of operating direction,snug the uppermost horizontal clamp screw(B),recheck synchronization.If the handwheel is turned in reverse of operating direction and the rod contacts the edge of the throat plate before the clamp gauge contacts the machine casting ,adjust as before,except turn the handwheel slightly in the operating direction.Use shim stock to insure no more than .005"(0. 1mm)exists between gauge and casting or between rod and throat plate ,in both the operating and reverse directions of the handwheel. When this setting has been made ,tighten the three horizontal clamp screws(B.Fig.3)securely,and recheck both clearance points with .005"0.1mm)shim gauge to assure no slippage occurred while tightening the screws.

TIGHTENING NEEDLE HEAD

When replacement of the needle bar, and or needle head is necessary,torque the needle head to needle bar 14-16 in.lbs.(1.6-1.8Nm)or use torque rod No.21227AR that has been supplied with the machine ,for the purpose of eliminating the possibility of distorting the needle bar due to overtightening.Insert the torque rod in the hole at the upper end of the needle bar, while holding the needle bar head with a suitable tool,turn the needle bar with the torque rod onto the needle bar head. When the rod starts to bend,the needle bar head has been threaded into the needle bar properly.

ALIGNING NEEDLES IN THROAT PLATE SLOTS

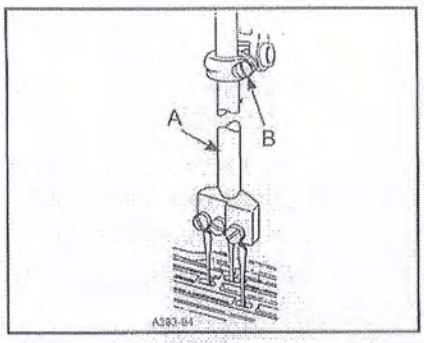

FIG.4

Insert a new set of needles , type and size specified, with screw (B,Fig.4) slightly loosened,lower needle bar(A) and turn needle head as required until the needles are centered in the throat plate needle hole slots . Tighten screw (B)torque to 19-21in. lbs.(2.1-2.4Nm).

NOTE: If the needles can not be aligned in the throat plate slots , the lower cylinder must be moved as stated below.

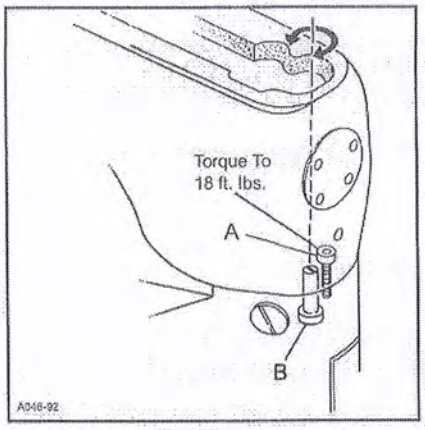

FIG.5

CENTERING THE CYLINDER

Remove the top front cover and gasket from the main frame. Loosen cylinder holding screw(A,Fig.5).Turn eccentric screw (B)clockwise or counterclockwise to move the cylinder so the needles are centered in the needle holes.Tighten screws(A) torque to 18 ft.lbs.and recheck settings.

NOTE:The cylinder may not move freely when the eccentric is turned because the joint sealant compound has set.

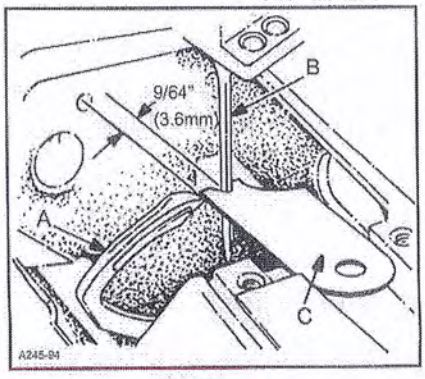

FIG.6

SETTING THE LOOPER

Insert a new set of needles,type and size specified.Always adjust the looper (A,Fig.6) for the left needle first.Set the looper so that the distance from the center of the needle(B)to the point of the looper (A) is 9/64" (3.6mm) when the looper is at its farthest position to the left.Looper gauge (C) No.21225-9/64 can be used advantageously in making this adjustment.If adjustment

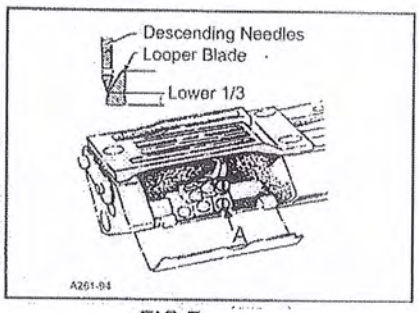

FIG.7

is required, loosen screw (A,Fig.7) in looper holder,permitting movement in either direction to attain the 9/64"(3.6mm) dimension as shown in Fig .6.Retighten screw(A.Fig.7).Repeat for other needles and loopers.

Rotate handwheel in operating direction to assure that the looper point passes to the rear of the needle to touch but not deflect.This adjustment can be made by loosening screw(A.Fig.7)in looper holder.Looper holder can be moved front to back to attain looper to needle setting.Always check the 9/64"(3.6mm) looper gauge setting after setting the looper to the back of the needle,and conversely,always check the setting of the looper to the back of the needle after setting the 9/64"(3.6mm)looper gauge.

The amount of looper avoid has been set at the factory to .110"(2.8mm).If it becomes necessary to adjust the amount of avoid it is recomended as a starting point ,to have the points of the decending needles contact the back of the lower 1/3 of the back of the looper blade.

SETTING THE LOOPER(CONT)

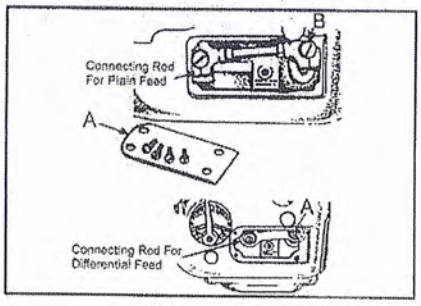

FIG.8

If more or less looper avoid motion is required.remove cylinder side cover(A,fig.8)located at the lower front left side.Use a screwdriver to loosen looper avoid link ball joint(B).Moving ball joint down in the lever slot increases the amount of looper avoid motion,moving it up acts the reverse.Retighten ball joint(B) securely.

NOTE:Whenever looper avoid is changed looper clearance to needle must also be reset.

SETTING HELGHT OF NEEDLE BAR

The height of the needle bar is correct when the top of the needle eye is 1/16"(1.6mm)below the underside of the looper,with the looper point even with the right side of the needle .To make adjustment loosen

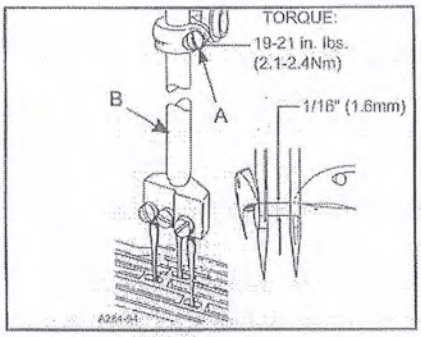

FIG.9

screw(A.Fig.9)and move needle bar (B)as required to attain dimension.

NOTE: Care must be taken not to disturb the alignment of the needles when moving the needle bar either up or down.

SETTING THE FEED DOGS FOR PLAIN FEED

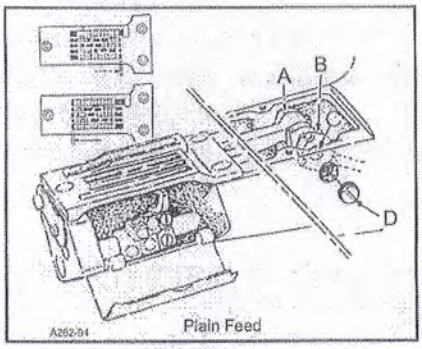

FIG.10

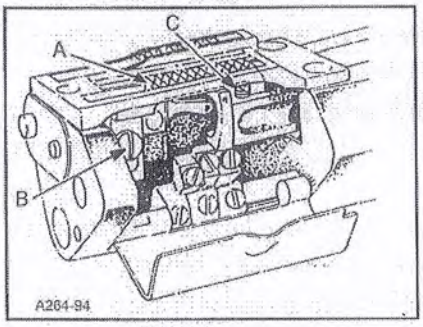

FIG.11

Assemble the main feed dog and throat plate.Main feed dog (A.Fig.11)at its highest position,should be set to project above the throat plate,the depth of its teeth.The feed dog mounting screw(B)and front support screw(C)should be set to maintain this setting.

The feed should be set so there is equal clearance between the front of the feed dog and the front of the feed slot in the throat plate when the feed dog is at its most forward travel, The same amount of clearance should be between the back of the feed dog and the back of the feed slot in the throat plate when the feed dog is at its most rearward travel.To attain this setting loosen screws (A and B,Fig.10)and remove plug screw(D).Using a screw driver turn eccentric pin (C) clockwise or counterclockwise to obtain proper setting.Tighten screws (A and B),reinstall plug screw(D).

SETTING THE FEED DOGS FOR DIFFERENTIAL FEED

Before assembling the main and differential feed dogs,set the feed bar eccentric pin (A,Fig.10A)located in the left side near center of cylinder,so that the slot in the head is in a horizontal position.This assures

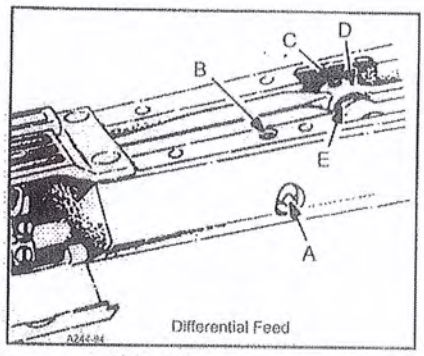

FIG.10A

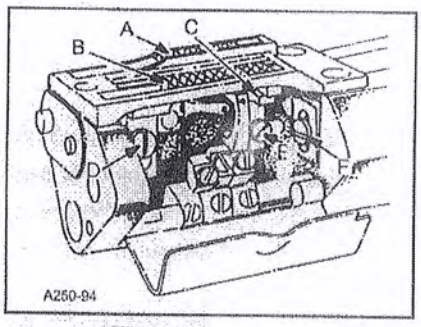

FIG.11A

a neutral position of eccentricity for the purpose tilting of the main and differential feed bars simultaneously.The feed bar pin is retained in position by set screw(B).Assemble differential feed dog (A,Fig.11A),main feed dog(B) and throat plate ,Both the main and differential feed dogs can be individually adjusted to height.Main feed dog (B)at its highest position,should be set to project above the throat plate,the depth of its teeth.If adjustment is necessary loosen screw(D)and move feed dog (B)up or down to attain correct setting.Feed dog support(C) should support front of feed dog.

SETTING THE FEED DOGS FOR DIFFERENTIAL FEED(CONT)

If adjustment is necessary loosen screw(E,Fig,11A)in feed dog support(C) and move as required.Retighten screw(E).The differential feed dog (A)may then be leveled with main feed dog (B).If adjustment is necessary loosen screw(F)and move feed dog up or down as required.Retighten screw(F).

NOTE:Should the main feed dog require repositioning due to contact with the throat plate in its forward or rearward travel ,loosen set screw(C,Fig.10A)in main feed bar driving link(D),rotate main feed bar eccentric driving stud(E)as required,Driving stud(E)has a thin hexagon head with cutouts on two of the flats allowing movement by tapping with a sharp pointed tool,when wrench21388AZ is not available.Whenever the main feed bar eccentric driving stud position has been changed,recheck rear needle guard setting, adjustment may be required.Retighten set screw(C). Position main feed dog support(C,Fig.11A)flush against bottom of main feed dog (B),tighten support screw(E)securely.

CHANGING STITCH LENGTH

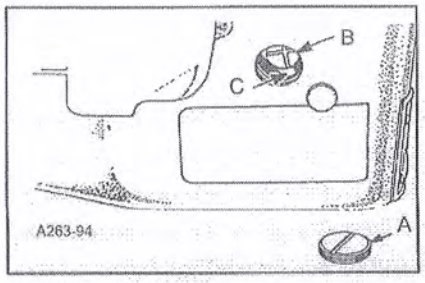

FIG.12

When change in stitch length is required,remove large plug screw(A,Fig.12).Loosen feed rocker driving link screw(B)in lever (C).Moving the feed rocker driving link up in the lever slot lengthens the stitch,moving it down ,shortens the stitch, Retighten link screw(B)securely and replace plug screw(A).

NOTE: If plug screw(A) is replaced with a new plug screw ,it should be sealed with a silicone seal. Any stitch length change,requires resetting the needle guard.

CAUTION:When making stitch length adjustment do not exceed maximum recommended stitch length due to possible part damage.

SETTING READ NEEDLE GUARD

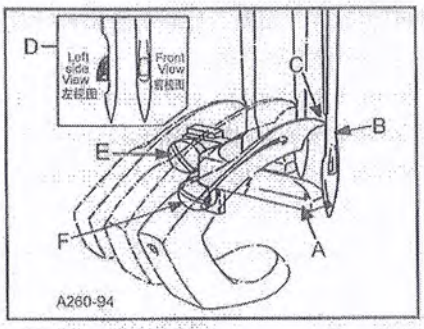

FIG.13

Set the rear needle guard(A,Fig.13)horizontally so that it barely contacts needles(B)when at its extreme forward position.If adjustment is necessary loosen screw(E)and move guard front to back as required.It should be set vertically as low as possible, yet have its guarding surface in contact with the needles until the points of the loopers(C),moving to the right,are even with the right side of the needles. If adjustment is necessary loosen screw(F)and move guard and holder up or down as required.

CAUTION:If stitch length is changed,needle guard must be reset.

NOTE:When installing the needle it should be parallel with the eye in line of feed.If adjustment is necessary, loosen screw(N,Fig.15)in needle head and rotate needle to attain adjustment(D,Fig.13).

PRESSER FOOT AND PRESSER BAR ADJUSTMENT

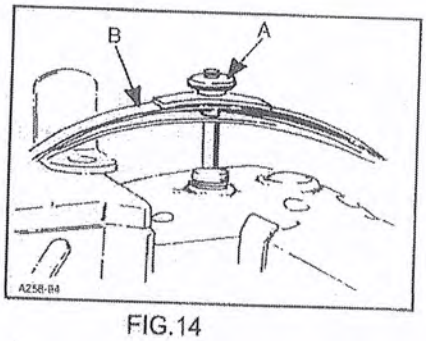

FIG.14

Adjusting or Replacing Presser Foot:
Remove presser bar leaf spring(B,Fig.14)and nut(B).Loosen screw(A,Fig.15)on presser bar guide(B).Loosen screws(C)in upper collar and screws(D) in needle lever thread pull-off lever.. Slide Presser bar upward high enough to slip on presser foot yoke(E)with foot attached and tighten screw(F)on flat of presser bar.Position foot so that the needle holes in the foot line up with the holes in the throat plate.Tighten screw(A).

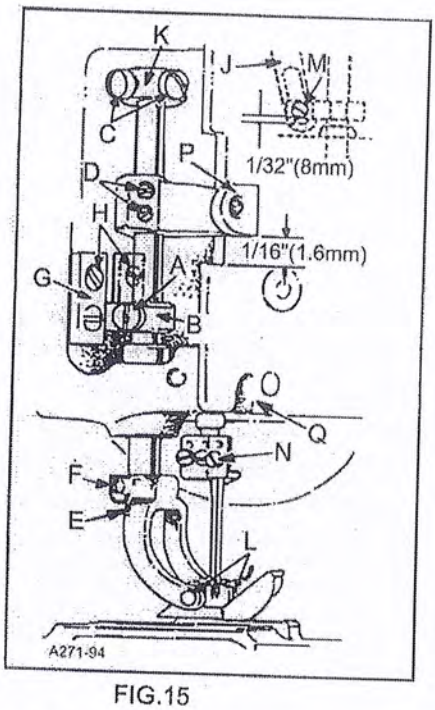

FIG.15

Presser foot guide plates(G,,Fig.15)should be set so that entire presser foot and bar assembly has free movement up and down with no left to right movement .

With foot properly aligned on throat plate and presser bar guide(B,Fig.15)securely fastened to presser bar,adjust both guide plates(G)to obtain above setting.Tighten four screws(H).

Reinstall presser bar spring(B,Fig.14)and knob(A),with presser foot resting on throat plate.

Set upper stop collar(K)to contact casting,so the bottom of the needle head and the top of the presser foot do not touch,at the bottom of the needle stroke when lifting foot.Tighten screw(C).

The presser foot should be adjusted to be 1/8"(3.17mm)above the throat plate before the feed roller mechanism begins to rise .. Loosen screw(A,Fig,15) in presser bar lifter and guide (B),raise or lower guide as required to attain the specified point at which the feed roller begins to rise .Retighten screw(A) and maintain needle settings.

NOTE : There should be a minimum 1/32"(0.8mm) clearance between screw (M,Fig.15)and the bottom of the slot in link(J).

Regulate the pressure on the presser foot by turning the presser spring regulating knob(A,Fig.14) located on top of pressure foot spring (B).

To remove just the presser foot, remove screws (L,Fig.15) and replace foot, retighten screws (L).

Needle lever thread pull-off(P) should be set 1/16(1.6mm)above bottom of slot in cover (Q)when presser foot is resting on throat plate.

UPPER FEED ROLLER ADJUSTMENT

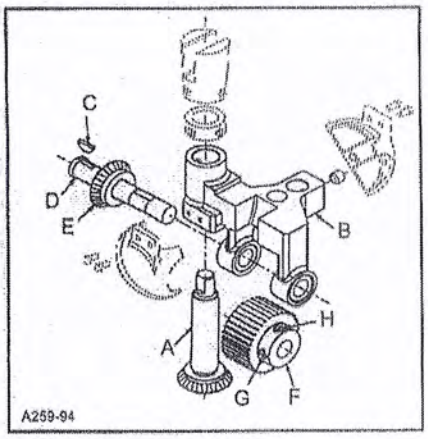

FIG.16

Assembly of Roller to Roller Yoke :

Assemble driven gear(A,Fig.16)through feed roller frame (B). Place woodruff key(C) into slot of feed roller shaft (D).Slide drive gear (E)on to shaft (D),make sure key(C)goes into slot in gear(E).While holding feed roller frame (B)with steel roller(F) between the two frame lobs, slide feed roller shaft(D) and assembled components through frame. Make sure that shoulder of roller (F)is to the right .Align screw(G) (first in operating direction on roller)on the flat of shaft (E).At the same time thrust shoulder of shaft(D) against face of gear(E),make sure left edge of roller is against face of gear(E),make sure left edge of roller is against right (inside) face of left lob .Secure screw(G) on flat of shaft (D) and tighten screw(H).

UPPER FEED ROLLER ADJUSTMENT(CONT)

When feed roller mechanism (C,Fig.17) has been removed or replaced,.003"(0.08mm) minimum to .005" (0.13mm) maximum clearance should be maintained between roller and throat plate.

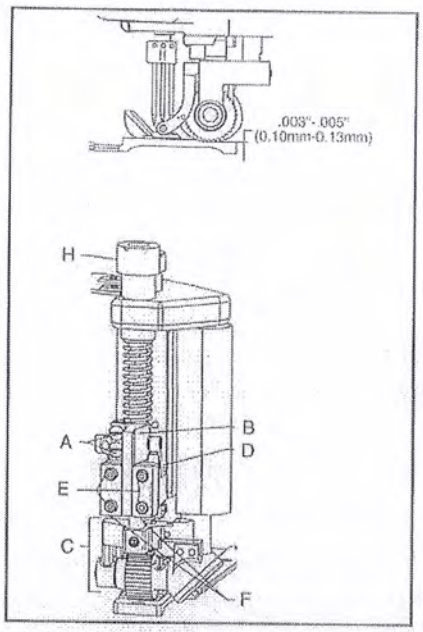

FIG.17

To Adjust Guiding System for Roller:

Loosen two screw(A).Using shim(s) adjust feed roller Mechanism(C)so that the roller is .003"(0.08mm)to .005"(0.13mm) above throat plate.Slide rear guide finger(B)down so that it sits on top of rear guide support block(D). Check to make sure roller is parallel to throat plate slots. Tighten two screws (A) to secure feed roller mechanism in place.

Setting Pressure for Feed Roller:

Regulate the pressure on the feed roller so that it exerts only enough pressure on the fabric to feed the work uniformly. Turning roller presser regulator (H,Fig,17) clockwise to increase or counterclockwise to decrease the pressure.

Setting of Feed Roller:

Guide finger for roller should be set so that entire roller mechanism has free movement up and down with no left to right movement .With roller properly aligned,the edge of roller should be parallel with feed slots in throat plate.

Guide plates(F) must be thrusted against guide finger(B) to secure feed roller mechanism(C).Thrust guide plates (F)against guide finger(B) with equal pressure .Tighten four screws(E) to hold plates in place.

THREAD TENSION AND RELEASE

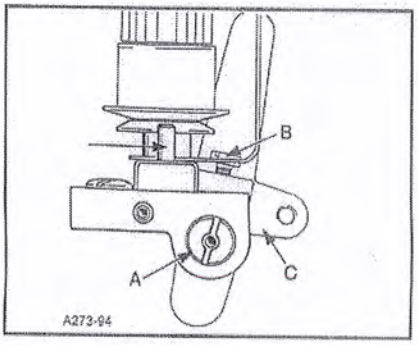

FIG.18

The thread tension release is set correctly when it begins to function at the point when the upper feed roller begins to rise. When adjustment is necessary ,loosen screw (B,Fig.18) in lift lever(C).Facing the tension release shaft (A) from the right end of the machine ,insert screwdriver in slot in shaft (A). Turn the screwdriver clockwise to raise pins(D) or counterclockwise to lower pins . Retighten screw(B).

DIFFERENTIAL CONTROL

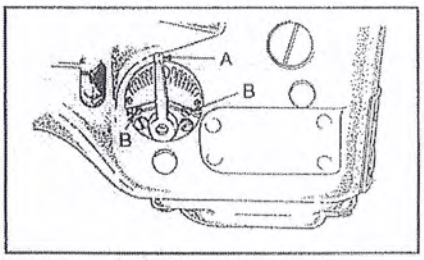

FIG.19

The amount of differential is controlled by lever(A,Fig.19).The adjusting plate is numbered from 1to 9.When the lever is set from numbers 1 to 4 reverse differently or stretching occurs. The numbers from 4 to 5 produce equal feed stitching while numbers 5 to 9 produce a gathering stitch.Screws (B)can be set to limit the movement of lever(A) or lock lever in one position. If top ply of material is coming out long, move lever toward operator,if top ply is short ,move lever away from operator,as required.

SETTING NEEDLE THREAD TAKE-UP AND FRAME EYELET

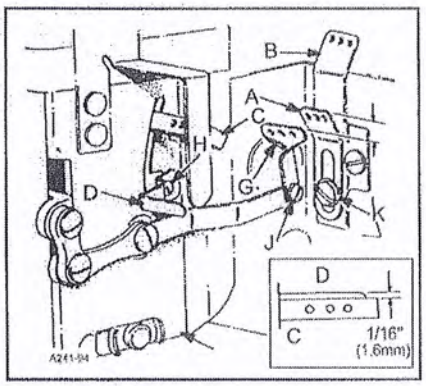

FIG.20

With the needle bar at the top of its stroke set the adjustable frame needle thread eyelet (A,Fig.20)in the lower mounting hole of eyelet (B) so the needle thread from eyelet (A) to the needle lever thread eyelet (C) will be in a straight line.If adjustment of eyelet (A) is necessary loosen screw (K) and move eyelet up or down as required .Retighten screw (K).

With the needle bar at the bottom of its stroke, the needle thread take-up (D) should be set so that it is 1/16"(1.6mm) above the edge of the needle lever thread eyelet (C)(See Insert).If adjustment is necessary loosen screw (H) and adjust lever (D) as required to attain 1/16".Tighten screw (H).

LOOPER THREAD TAKE-UP ADJUSTMENT

With the machine rotating in operating direction the looper thread take-up is in time when the first screw

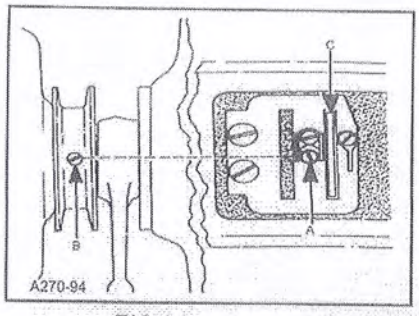

FIG.21

coming into view (A,Fig.21) is in line with the spot screw (B) on the main shaft in the pulley.NOTE:screw (A) is accessable through the hole in the take-up. With this setting correct,the looper thread should cast-off of the take-up (C) when the needles are safely in the triangle. If adjustment is necessary loosen twoscrews(A) in take-up (C)position screws in line with spot screw(B).Tighten screws(A).

NOTE: Make sure take-up cam is centered left to right in cast-off slot .

FOLDER ADJUSTMENT

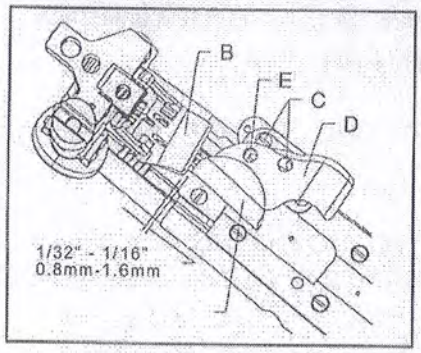

FIG.22

Slide folder (A,Fig.22) on arm .The folder should be as close to the front of presser foot (B) as possible ,making sure to avoid the presser foot contacting the folder when sewing across seams. If adjustment is necessary loosen screws(C)to move entire folder left to right or front to back as required. If just adjustment of upper scroll(D) is needle loosen screw(E) and position scroll to obtain proper seam margin.

AIR BLOWER TUBE ADJUSTMENT

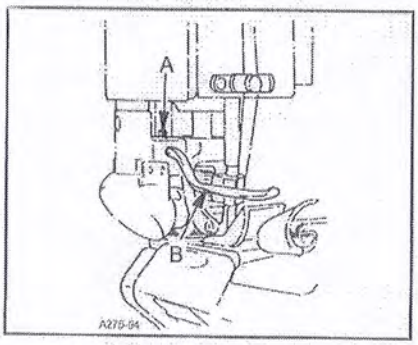

FIG.23

The air blower tube should be set left to right so it is parallel with the throat plate .It should be set front to back so when feeding over a cross seam the presser foot does not contact the tube .If adjustment is necessary ,loosen screw(A,Fig.23) and position air blower tube (B) as required. Retighten screw (A).

PARTS LIST

MAIN FRAME, CAST-OFF PLATE, EYELETS, MISCELLANEOUS COVERS AND BUSHINGS

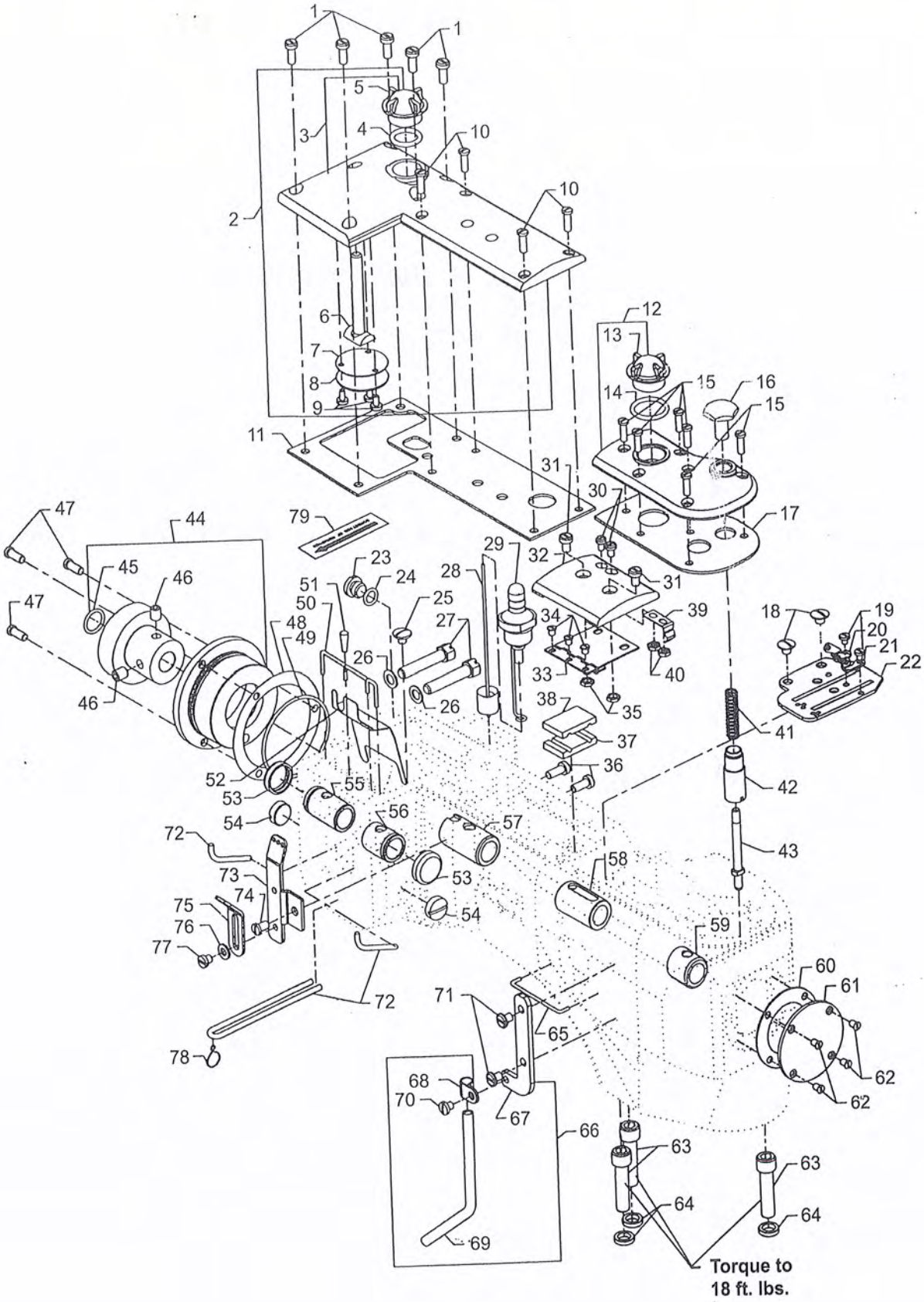

DESCRIPTION

1	3588A001	Screw	5
2	3588A002	Chamber Cover Assembly	1
3	3588A003	Crank Chamber Cover	1
4	3588A004	"O" Ring	1
5	3588A005	Oil Signt Gauge	1
6	3588A006	Presser Spring	1
7	3588A007	Gasket	1
8	3588A008	Cover Plate	1
9	3588A009	Screw	3
10	3588A010	Screw	4
11	3588A011	Gasket	1
12	3588A012	Top Cover, front	1
13	3588A013	Oil Sight Gauge	1
14	3588A014	"O"Ring	1
15	3588A015	Screw	6
16	3588A016	Looper Throw-Out Plunger Knob	1
17	3588A017	Gasket	1
18	3588A018	Screw	2
19	3588A019	Screw	2
20	3588A020	Cast-Off Plate Eyelet	1
21	3588A021	Cast-Off Plate Eyelet	1
22	3588A022	Cast-Off Plate	1
23	3588A023	Oil Drain Screw	1
24	3588A024	"O"Ring	1
25	3588A025	Screw, for oil wick	1
26	3588A026	Washer	2
27	3588A027	Screw	2
28	3588A028	Oil Sight Gauge Indicator Assembly	1
29	3588A029	Oil Sight Gauge	1
30	3588A030	Screw	2
31	3588A031	Screw	2
32	3588A032	Top Cover, middle	1
33	3588A033	Middle Top Cover Hinge	1
34	3588A034	Screw	3
35	3588A035	Nut	2
36	3588A036	Screw, for rotary pump housing	2
37	3588A037	Seal, Lower	1
38	3588A038	Seal, Upper	1
39	3588A039	Spring, top cover	1
40	3588A040	Nut	2
41	3588A041	Looper Throw-Out Plunger Spring	1
42	3588A042	Looper Throw-Out Bushing	1
43	3588A043	Looper Throw-Out Plunger	1
44	3588A044	Bearig Housing Assembly	1
45	3588A045	"O"Ring	1
46	3588A046	Screw	2
47	3588A047	Screw	3
48	3588A048	Gasket	1
49	3588A049	"O"Ring	1
50	3588A050	Oil Wick	1
51	3588A051	Cork	1
52	3588A052	Oil Shield	1

MAIN FRAME, CAST-OFF PLATE, EYELETS, MISCELLANEOUS COVERS AND BUSHINGS (CONT)

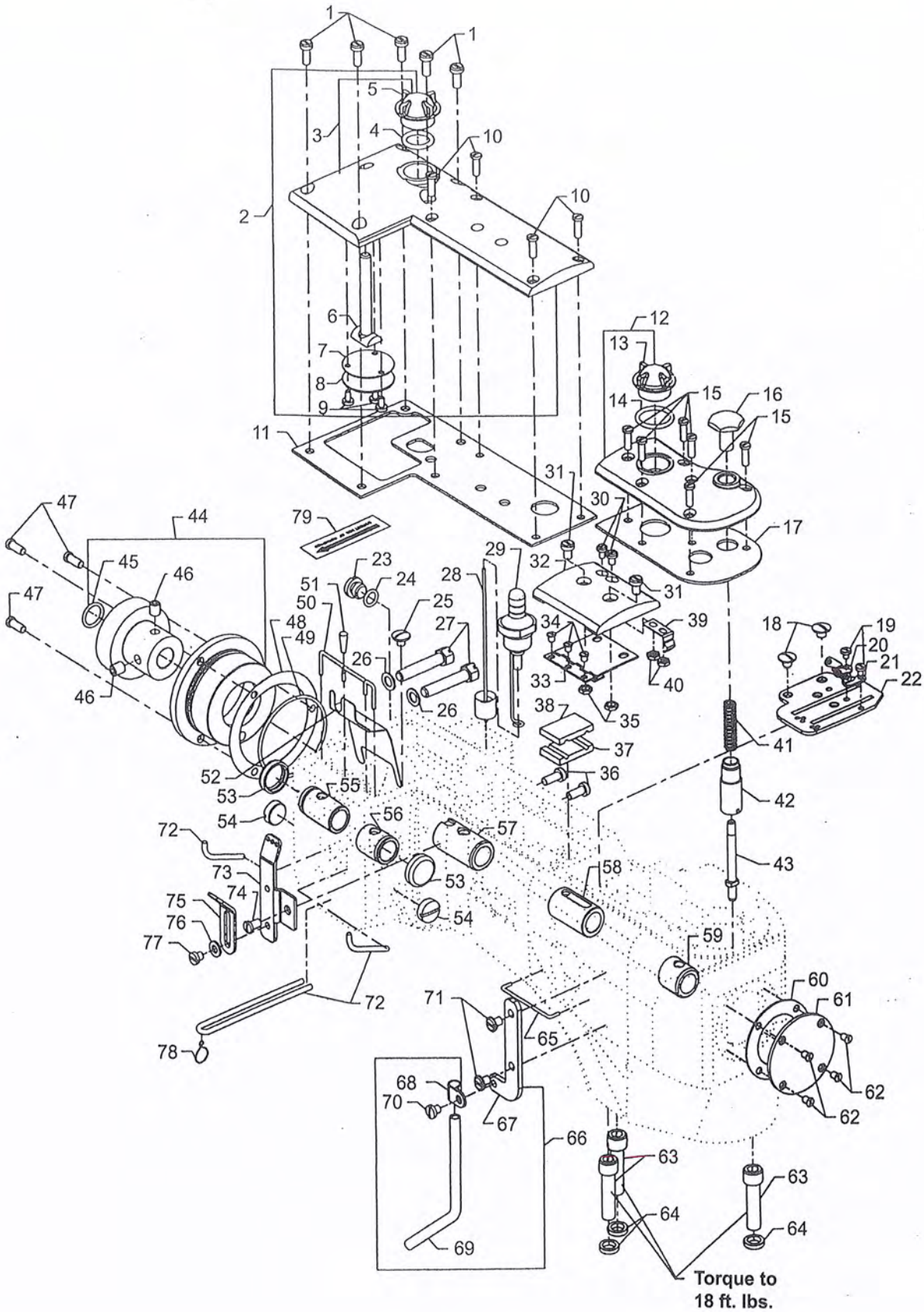

DESCRIPTION

53	3588A053	Bushing Cap, plastic	2
54	3588A054	Plug Screw	2
55	3588A055	Needle Lever Shaft Bushing, rear	1
56	3588A056	Needle Lever Shaft Bushing, front	1
57	3588A057	Crankshaft Bushing, front	1
58	3588A058	Mainshaft Bushing, rear	1
59	3588A059	Mainshaft Bushing, front	1
60	3588A060	Gasket	1
61	3588A061	Mainframe End Cover	1
62	3588A062	Screw	4
63	3588A063	Screw	3
64	3588A064	Washer	3
65	3588A065	Looper Thread Guide Wire	1
66	3588A066	Looper Thread Tube Assemly, for differential feed	1
	3588B066	Looper Thread Tube Assemly, for plain feed(not shown)	1
67	3588A067	Support	1
68	3588A068	Clamp, tube	1
69	3588A069	Tube, for differential feed	1
	3588B069	Tube, for plain feed(not shown)	1
70	3588A070	Screw	1
71	3588A071	Screw	2
72	3588A072	Oil Wick	1
73	3588A073	Needle Thread Eyelet, three holes	1
74	3588A074	Screw	1
75	3588A075	Needle Thread Eyelet, three holes	1
76	3588A076	Washer	1
77	3588A077	Screw	1
78	3588A078	Oil Wick Hook, upper	1
79	3588A079	Label	1

FOLDER, CYLINDER COVERS AND BUSHINGS FOR DIFFERENTIAL FEED

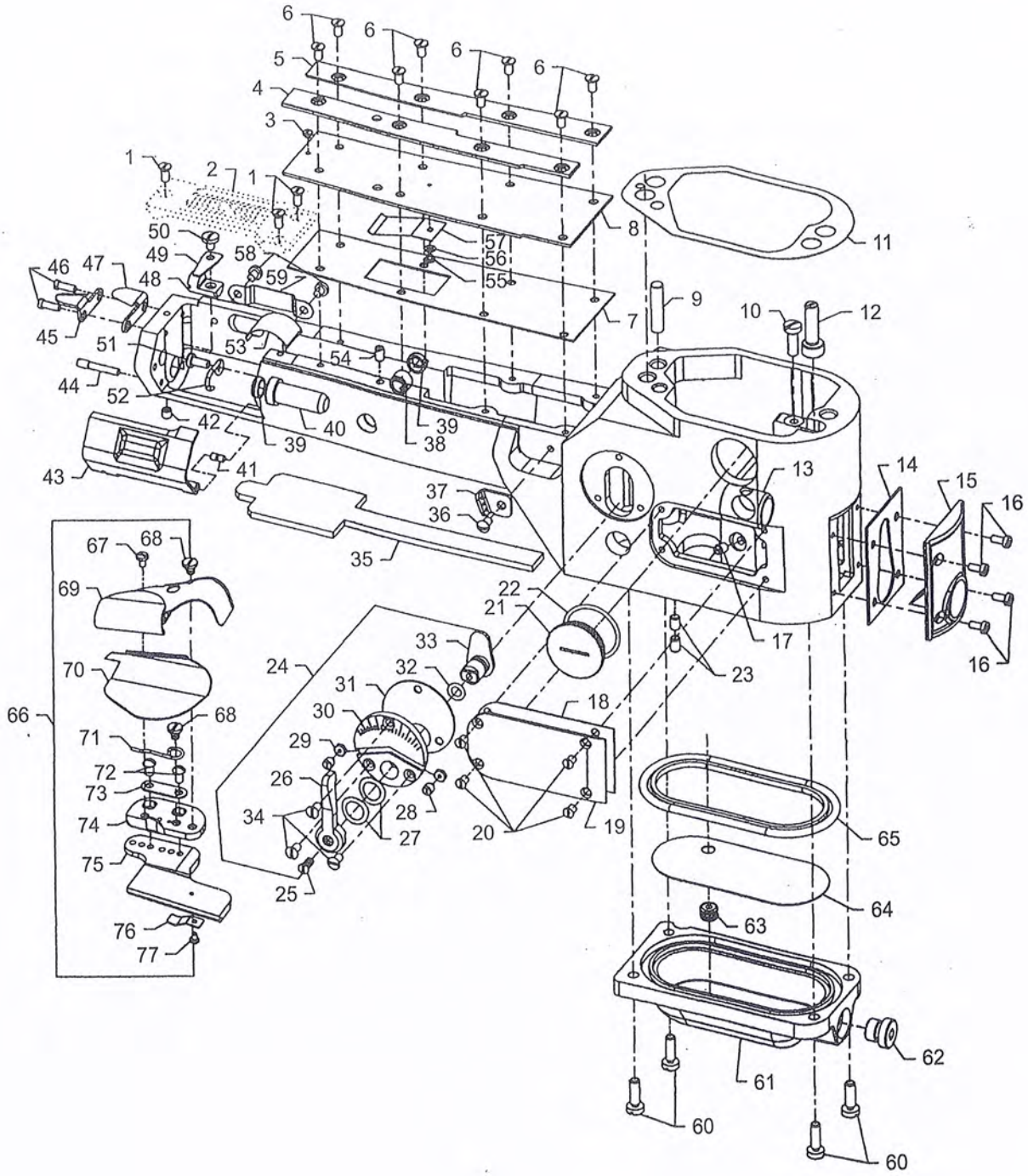

		DESCRIPTION	
1	3588A080	Screw	3
2	3588A081	Throat Plate(see page 59)	1
3	3588A082	Screw	1
4	3588A083	Folder Gib, left	1
5	3588A084	Folder Gib, right	1
6	3588A085	Screw	8
7	3588A086	Gasket	1
8	3588A087	Cylinder Cover	1
9	3588A088	Dowel Pin, straight	1
10	3588A089	Screw	1
11	3588A090	Gasket	1
12	3588A091	Eccentric Stud, for Styles 35800BWW, 35800BWWL	1
13	3588A092	Looper Shaft Bushing, front	1
14	3588A093	Gasket	1
15	3588A094	Cylinder Cover and Oil Gauge, front	1
16	3588A095	Screw	4
17	3588A096	Screw	1
18	3588A097	Gasket	1
19	3588A098	Cylinder Side Cover	1
20	3588A099	Screw	4
21	3588A100	Plug Screw	1
22	3588A101	"O"Ring	1
23	3588A102	Screw	2
24	3588A103	Differential Feed Control Assembly	1
25	3588A104	Screw	1
26	3588A105	Operating Lever	1
27	3588A106	Spring Washer	2
28	3588A107	Stop Screw Pin	2
29	3588A108	Nut	2
30	3588A109	Adjusting Plate	1
31	3588A110	Gasket	1
32	3588A111	Oil Seal Ring	1
33	3588A112	Adjusting Lever	1
34	3588A113	Screw	3
35	3588A114	Felt	1
36	3588A115	Screw	1
37	3588A116	Looper Thread Eyelet	1
38	3588A117	Bushing, for feed bar eccentric stud	1
39	3588A118	Oil Seal	2
40	3588A119	Looper Shaft Bushing, rear	1
41	3588A120	Pin	1
42	3588A121	Screw, for cylinder hinge cover spring support stud	1
43	3588A122	Cylinder Hinged Cover	1
44	3588A123	Screw Pin	1
45	3588A124	Chain Cutter Blade, upper	1
46	3588A125	Screw	2
47	3588A126	Chain Cutter Blade, lower	1
48	3588A127	Cylinder Hinged Cover Spring Support stud	1
49	3588A128	Cylinder Cover Spring	1
50	3588A129	Screw	1
51	3588A130	Screw	1
52	3588A131	Cylinder Looper Thread Guide Wire	1

FOLDER, CYLINDER COVERS AND BUSHINGS FOR DIFFERENTIAL FEED (CONT)

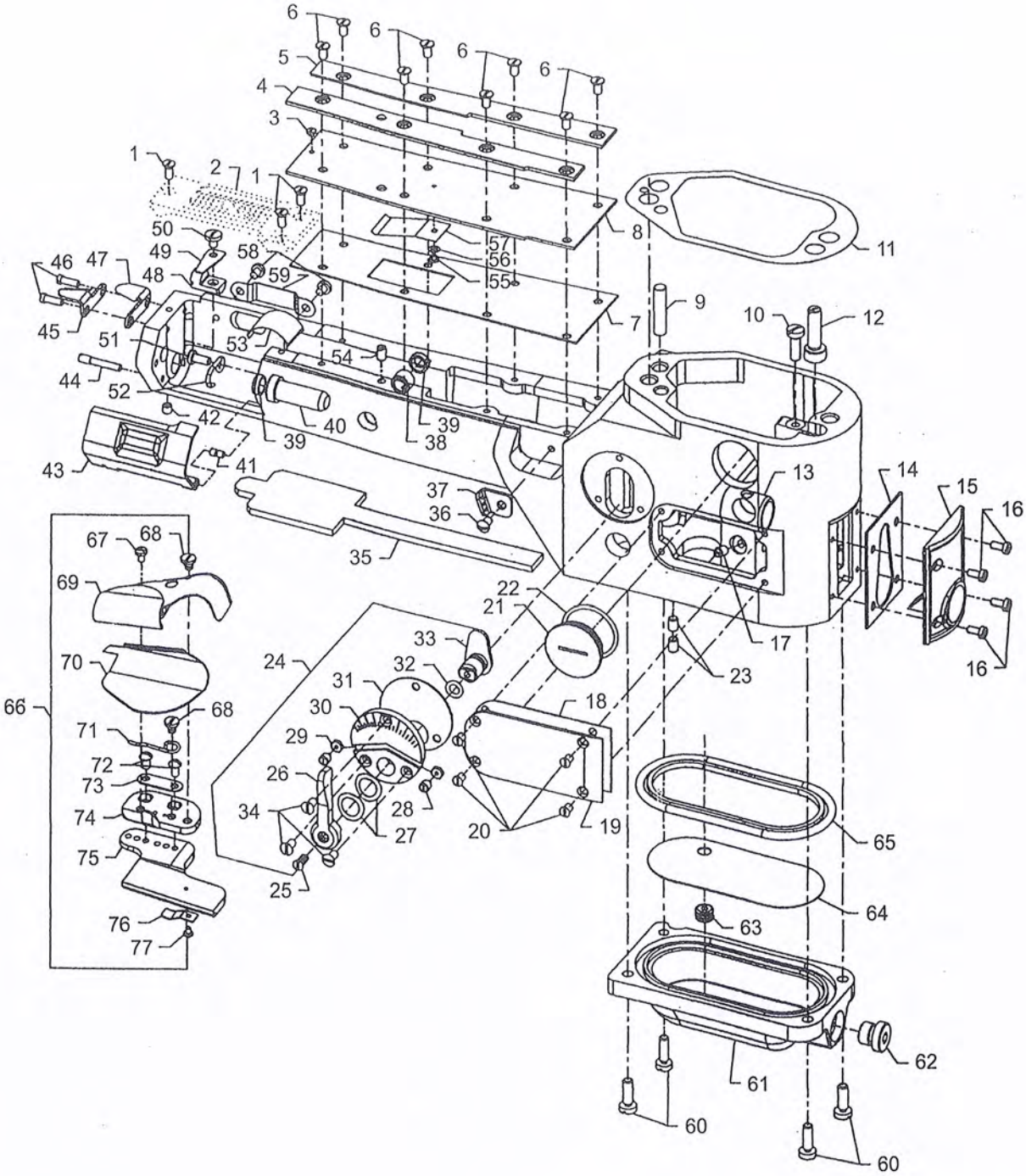

		DESCRIPTION	
53	3588A132	Lower Lint Shield	1
54	3588A133	Screw	1
55	3588A134	Screw	1
56	3588A135	Washer	1
57	3588A136	Upper Lint Shield	1
58	3588A137	Screw	2
59	3588A138	Cylinder Guard ,for Looper	1
60	3588A139	Screw	4
61	3588A140	Bottom Cover	1
62	3588A141	Screw	1
63	3588A142	"O"Ring	1
64	3588A143	Screw	1
65	3588A144	Gasket	1
66	3588A145	Folder Assembly,for all Styles	1
67	3588A146	Screw	1
68	3588A147	Screw	2
69	3588A148	Upper Scroll and Base	1
70	3588A149	Lower Scroll	1
71	3588A150	Lower Scroll Spring	1
72	3588A151	Screw	2
73	3588A152	Clamp Plate	1
74	3588A153	Base	1
75	3588A154	Folder Support Slide	1
76	3588A155	Folder Support Spring	1
77	3588A156	Screw	1

FOLDER, CYLIDER COVERS AND BUSHINGS FOR PLAIN FEED

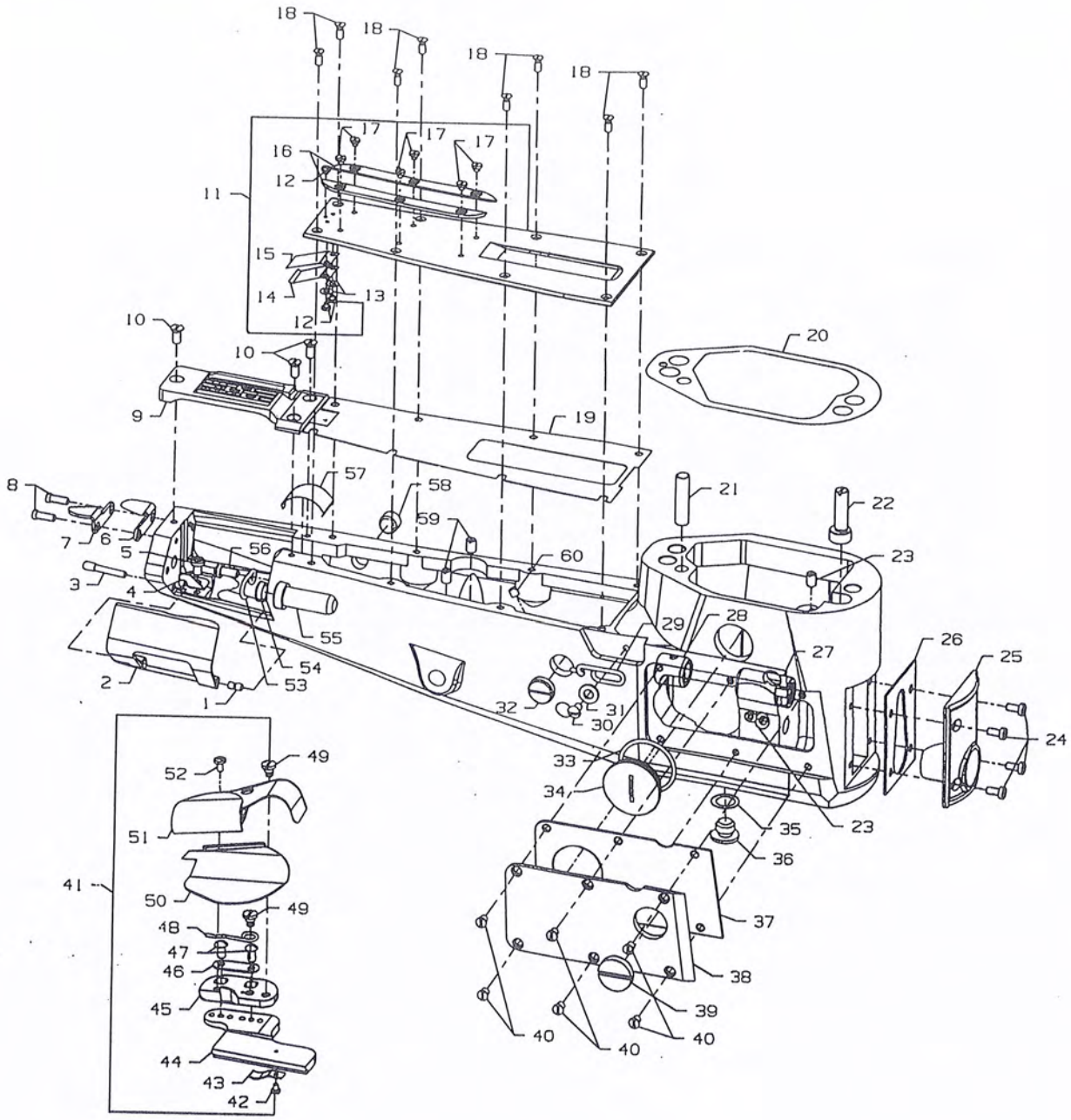

DESCRIPTION

1	3588B001	Pin	1
2	3588B002	Cylinder Hinged Cover	1
3	3588B003	Screw Pin	1
4	3588B004	Spring	1
5	3588B005	Screw	1
6	3588B006	Chain Cutter Blade,lower	1
7	3588B007	Chain Cutter Blade,upper	1
8	3588B008	Screw	2
9	3588B009	Throat Plate(see page 59)	1
10	3588B010	Screw,for all throat plates	3
11	3588B011	Cylinder Cover	1
12	3588B012	Screw	3
13	3588B013	Washer	2
14	3588B014	Cylinder Lint Shield,upper	1
15	3588B015	Cylinder Lint Shield Spring	1
16	3588B016	Cylinder Cover Adjustable Gib	2
17	3588B017	Screw	6
18	3588B018	Screw	8
19	3588B019	Gasket	1
20	3588B020	Gasket	1
21	3588B021	Dowel Pin,straight	1
22	3588B022	Eccentric Pin	1
23	3588B023	Screw	2
24	3588B024	Screw	4
25	3588B025	Cylinder Cover and Oil Gauge	1
26	3588B026	Gasket	1
27	3588B027	Looper Shaft Bushing,front	1
28	3588B028	Looper Shaft Bushing,Middle	1
29	3588B029	Looper Thread Eyelet	1
30	3588B030	Screw	1
31	3588B031	Washer	1
32	3588B032	Plug Screw	1
33	3588B033	"O"Ring	1
34	3588B034	Plug Screw	1
35	3588B035	Gasket	1
36	3588B036	Oil Drain Plug Screw	1
37	3588B037	Gasket	1
38	3588B038	Cylinder Side Cover	1
39	3588B039	Plug Screw	1
40	3588B040	Screw	6
41	3588B041	Folder Assembly,for all styles	1
42	3588B042	Screw	1
43	3588B043	Folder Support Spring	1
44	3588B044	Folder Support Slide	1
45	3588B045	Base	1
46	3588B046	Glamp,for sliding base	1
47	3588B047	Screw	2
48	3588B048	Spring	1
49	3588B049	Screw	2
50	3588B050	Lower Scroll	1
51	3588B051	Upper Scroll	1
52	3588B052	Screw	1

FOLDER, CYLIDER COVERS AND BUSHINGS FOR PLAIN FEED (CONT)

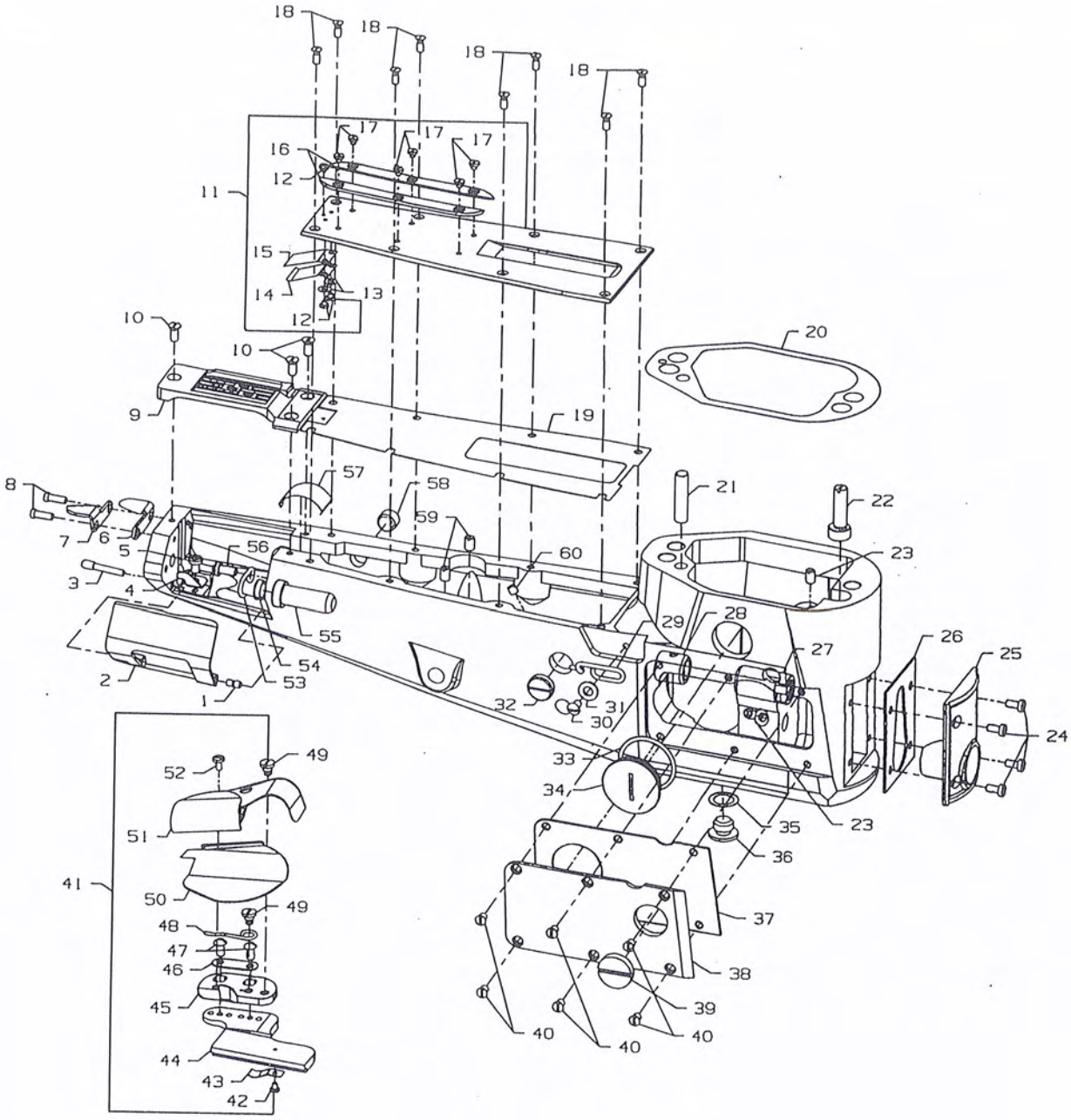

DESCRIPTION

53	3588B053	Looper Thread Guide Wire	1
54	3588B054	Oil Seal for 35850G	1
55	3588B055	Looper Shaft Bushing, rear	1
56	3588B056	Screw	1
57	3588B057	Lower Lint Shield	1
58	3588B058	Plug Screw	1
59	3588B059	Screw, for feed lifter lever shaft	2
60	3588B060	Screw, for feed rocker shaft	1

DETACHABLE HEAD ASSEMBLY

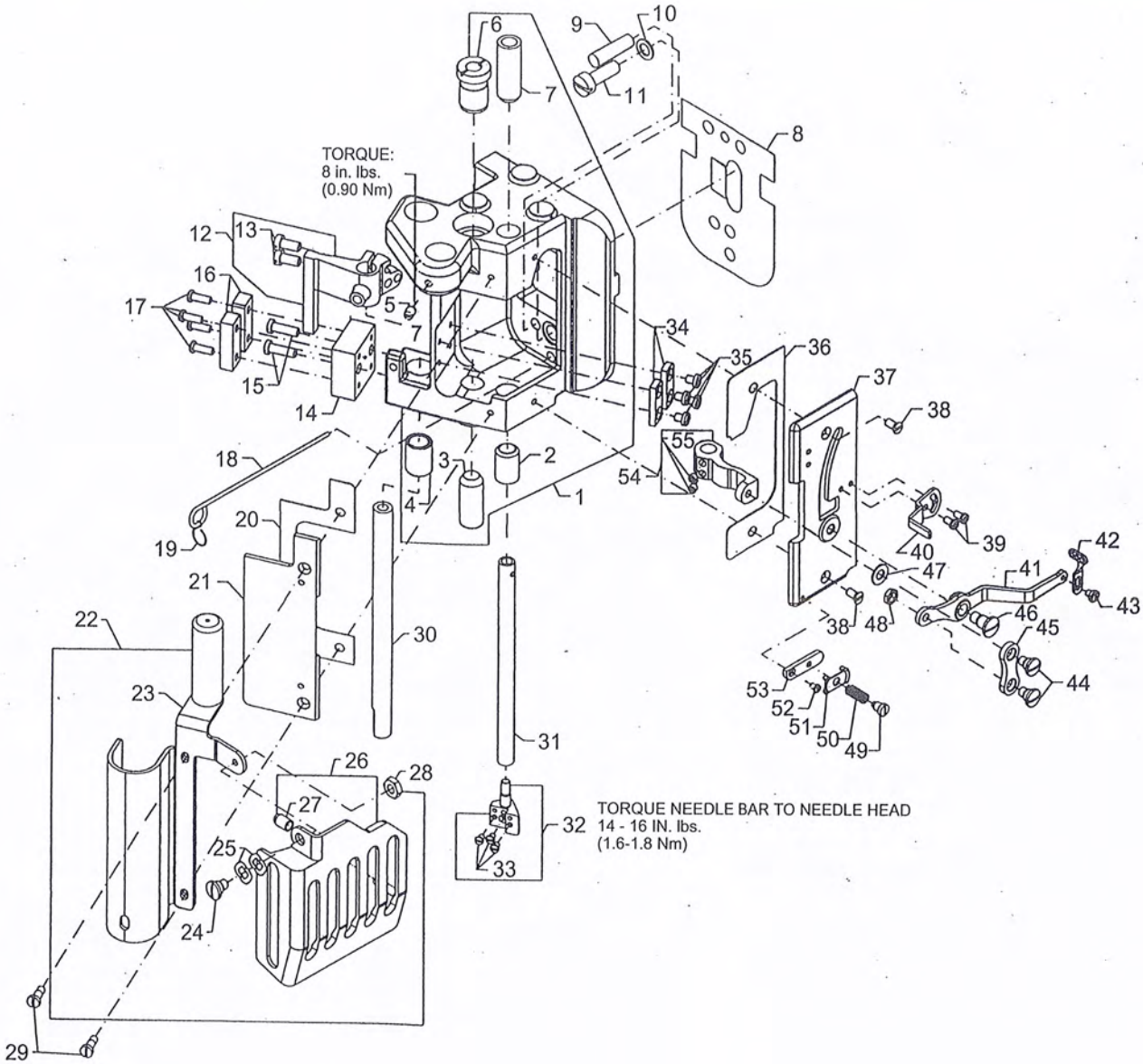

DESCRIPTION

1	3588A157	Detachable Head Assembly	1
2	3588A158	Lower Needle Bar Bushing	1
3	3588A159	Presser Bar Bushing	1
4	3588A160	Bushing	1
5	3588A161	Set Screw	1
6	3588A162	Presser Bar Bushing	1
7	3588A163	Upper Needle Bar Bushing	1
8	3588A164	Plate, baffle	1
9	3588A165	Pin, taper	1
10	3588A166	Washer	1
11	3588A167	Screw	1
12	3588A168	Guide Finger, rear	1
13	3588A169	Screw	2
14	3588A170	Block, support, rear guide	1
15	3588A171	Screw	2
16	3588A172	Plate, guide , roller bar	2
17	3588A173	Screw	4
18	3588A174	Oil wick	1
19	3588A175	Oil wicking hook	1
20	3588A176	Gasket	1
21	3588A177	Cover, head, left	1
22	3588A178	Sewing Guard Assembly	1
23	3588A179	Puller Drive Cover Assembly	1
24	3588A180	Screw	1
25	3588A181	Spring Washer	2
26	3588A182	Sewing Guard	1
27	3588A183	Bumper Plug	1
28	3588A184	Nut	1
29	3588A185	Screw	2
30	3588A186	Roller Presser Bar	1
31	3588A187	Needle Bar	1
32	3588A188	Needle Head(8 guage)	1
	3588A189	Needle Head(9guage)	1
33	3588A190	Screw	3
34	3588A191	Plate, guide, presser bar	2
35	3588A192	Screw	4
36	3588A193	Gasket	1
37	3588A194	Cover, head, front	1
38	3588A195	Screw	2
39	3588A196	Screw	2
40	3588A197	Take-Up, needle thread	1
41	3588A198	Needle Thread Control lever	1
42	3588A199	Needle Thread Control lever Eyelet	1
43	3588A200	Screw	1
44	3588A201	Screw	2
45	3588A202	Control Lever Connection Link	1
46	3588A203	Screw	1
47	3588A204	Washer	2
48	3588A205	Nut	1
49	3588A206	Screw	1
50	3588A207	Spring	1
51	3588A208	Nipper Plate, needle thread	1

DETACHABLE HEAD ASSEMBLY (CONT)

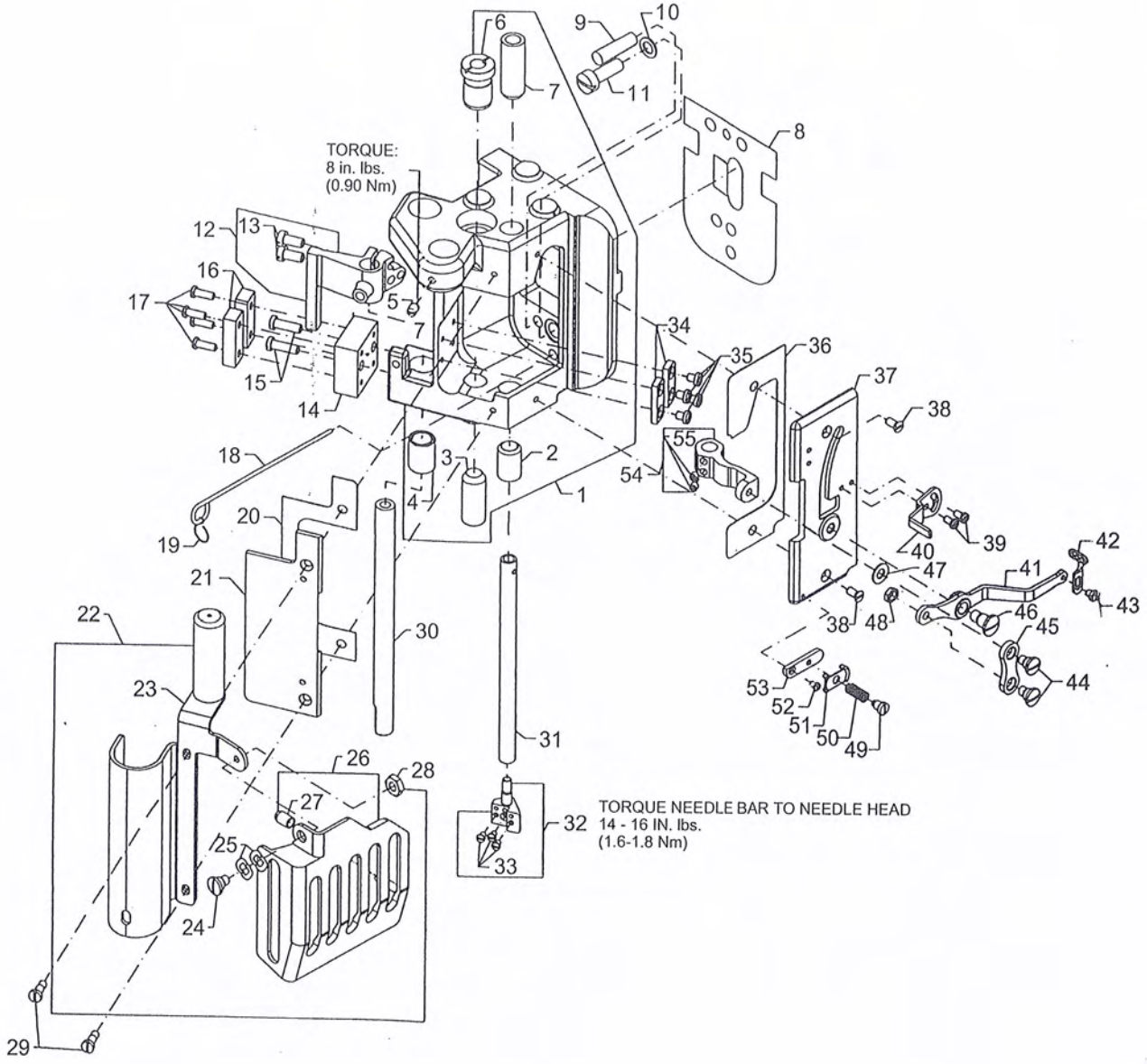

		DESCRIPTION	
52	3588A209	Screw	1
53	3588A210	Needle Thread Nipper Base	1
54	3588A211	Thread Controller Arm	1
55	3588A212	Screw	2

OILING, NEEDLE LEVER, CRANKSHAFT AND MAIN SHAFT PARTS

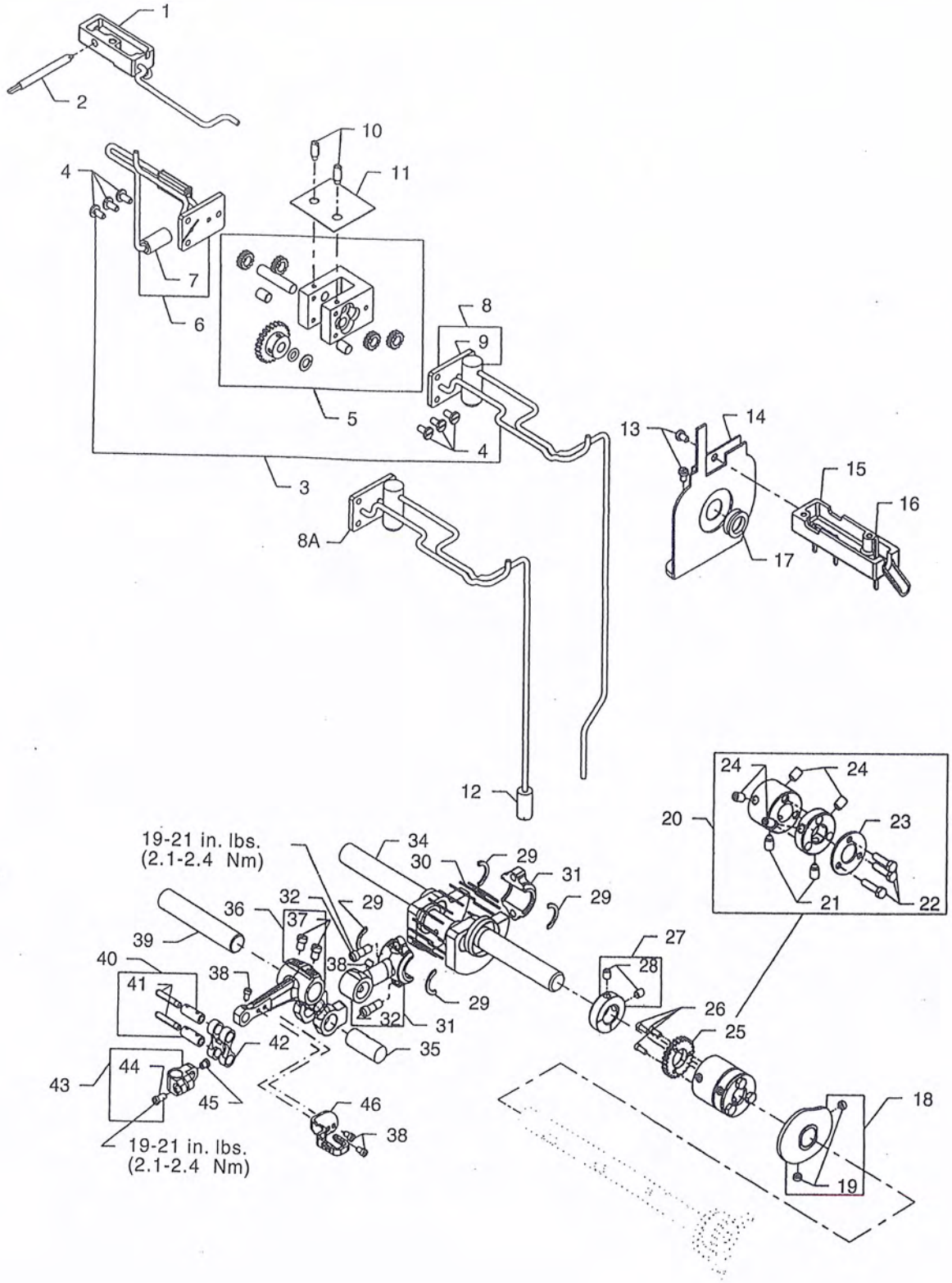

DESCRIPTION

1	3588A213	Oil Reservoir, back	1
2	3588A214	Oil Reservoir Outlet tube	1
3	3588A215	Oil Pump Assembly for 358800DNU	1
	3588B215	Oil pump Assembly for 358800DRU	1
4	3588A216	Screw	6
5	3588A217	Oil Pump Assembly	1
6	3588A218	Oil Pump Assembly Cover, rear	1
7	3588A219	Intake Filter	1
8	3588A220	Oil Pump Housing Cover, front for 35800DNU	1
	3588B220	Oil Pump Housing Cover, front for 35800DRU	1
9	3588A221	Plug Screw	1
10	3588A222	Vent Screw, for oil pump	2
11	3588A223	Gasket	1
12	3588B224	Oil filter for 35800DRU	1
13	3588A224	Screw	2
14	3588A225	Take-Up Shield Assembly	1
15	3588A226	Oil Reservoir, front	1
16	3588A227	Oil Wick	1
17	3588A228	Oil seal Ring	1
18	3588A229	Looper Thread Take-Up	1
19	3588A230	Screw	2
20	3588A231	Mainshaft and Crankshaft Coupling	1
21	3588A232	Spot Screw	2
22	3588A233	Screw	3
23	3588A234	washer Plate	1
24	3588A235	Set Screw	4
25	3588A236	Oil Pump Driving Gear	1
26	3588A237	Screw	3
27	3588A238	Collar	1
28	3588A240	Screw	2
29	3588A241	Needle Bearing Retainer	4
30	3588A242	Needle Bearing	28
31	3588A243	Needle Lever Connecting Rod	1
32	3588A244	Screw	2
33	3588A245	Screw	1
34	3588A246	Crankshaft	1
35	3588A247	Needle Lever Connecting Rod Pin	1
36	3588A248	Needle Lever	1
37	3588A249	Screw	2
38	3588A250	Screw	1
39	3588A251	Needle Lever Shaft	1
40	3588A252	Link Pin	2
41	3588A253	Oil Wick	2
42	3588A254	Needle Lever Link	1
43	3588A255	Needle Bar Connection	1
44	3588A256	Screw	1
45	3588A257	Screw	1
46	3588A258	Needle Lever Thread Eyelet	1

PLAIN FEED BAR, FEED LIFT&FEED DRIVE COMPONENTS FOR PLAIN FEED

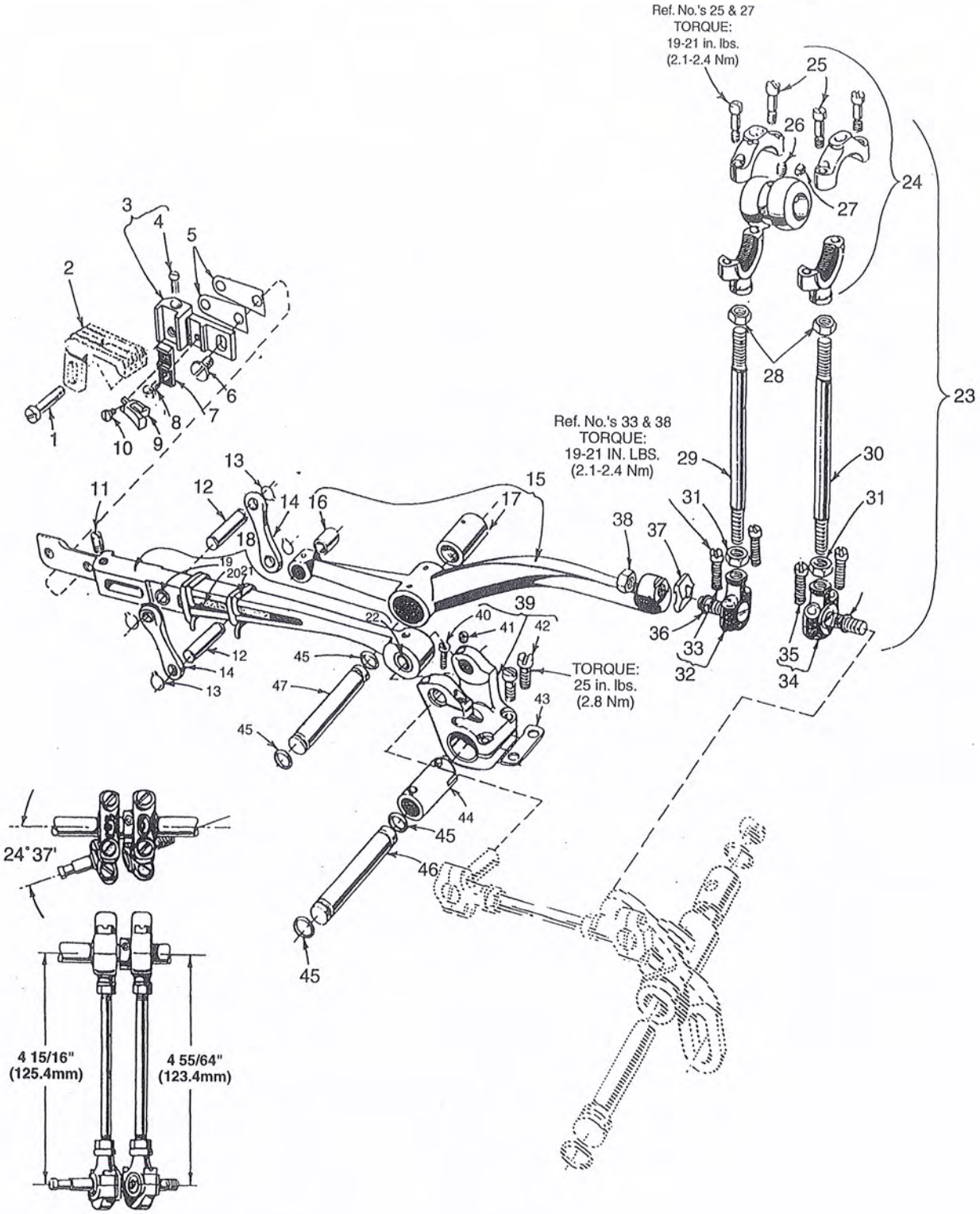

DESCRIPTION

1	3588B061	Screw	1
2	3588B062	Feed Dog (see page 59)	1
3	3588B063	Feed Dog Holder	1
4	3588B064	Screw, for adjusting feed dog height	1
5	3588B065	Feed Dog Holder Shim	2
6	3588B067	Screw	1
7	3588B068	Needle Guard Holder	1
8	3588B070	Screw	1
9	3588B071	Needle Guard	1
10	3588B072	Screw, for needle guard	1
11	3588B073	Feed Dog Support Screw	1
12	3588B074	Link Pin	2
13	3588B075	Retaining Ring	4
14	3588B076	Link, right and left (pair)	1
15	3588B077	Feed Lift Lever	1
16	3588B078	Bushing	1
17	3588B079	Bushing	1
18	3588B080	Feed Bar	1
19	3588B081	Bushing	1
20	3588B082	Oil Wicking	1
21	3588B083	Wire Spring Clip	2
22	3588B084	Bushing	1
23	3588B085	Connecting Rod Assembly	1
24	3588B086	Avoid Eccentric	1
25	3588B087	Screw	4
26	3588B088	Screw	1
27	3588B089	Spot Screw	1
28	3588B090	Nut, left thread	2
29	3588B091	Feed Lift Eccentric Connecting Rod	1
30	3588B092	Feed Rocker and Looper Avoid Eccentric Connecting Rod	1
31	3588B093	Nut, right thread	2
32	3588B094	Ball Joint	1
33	3588B095	Screw	2
34	3588B096	Ball Joint	1
35	3588B097	Screw	2
36	3588B098	Shim	as required
37	3588B099	Washer	1
38	3588B100	Nut	1
39	3588B101	Feed Rocker	1
40	3588B102	Screw	1
41	3588B103	Screw	1
42	3588B104.	Screw	2
43	3588B105	Feed Rocker Bushing Key	1
44	3588B106	Feed Rocker Bushin	1
45	3588B107	"O" Ring	4
46	3588B108	Feed Rocker Shaft	1
47	3588B109	Feed Lift Lever Shaft	1

DIFFERENTIAL FEED BAR, MAIN FEED BAR, FEED LIFT ECCENTRIC ASSEMBLY FOR DIFFERENTIAL FEED

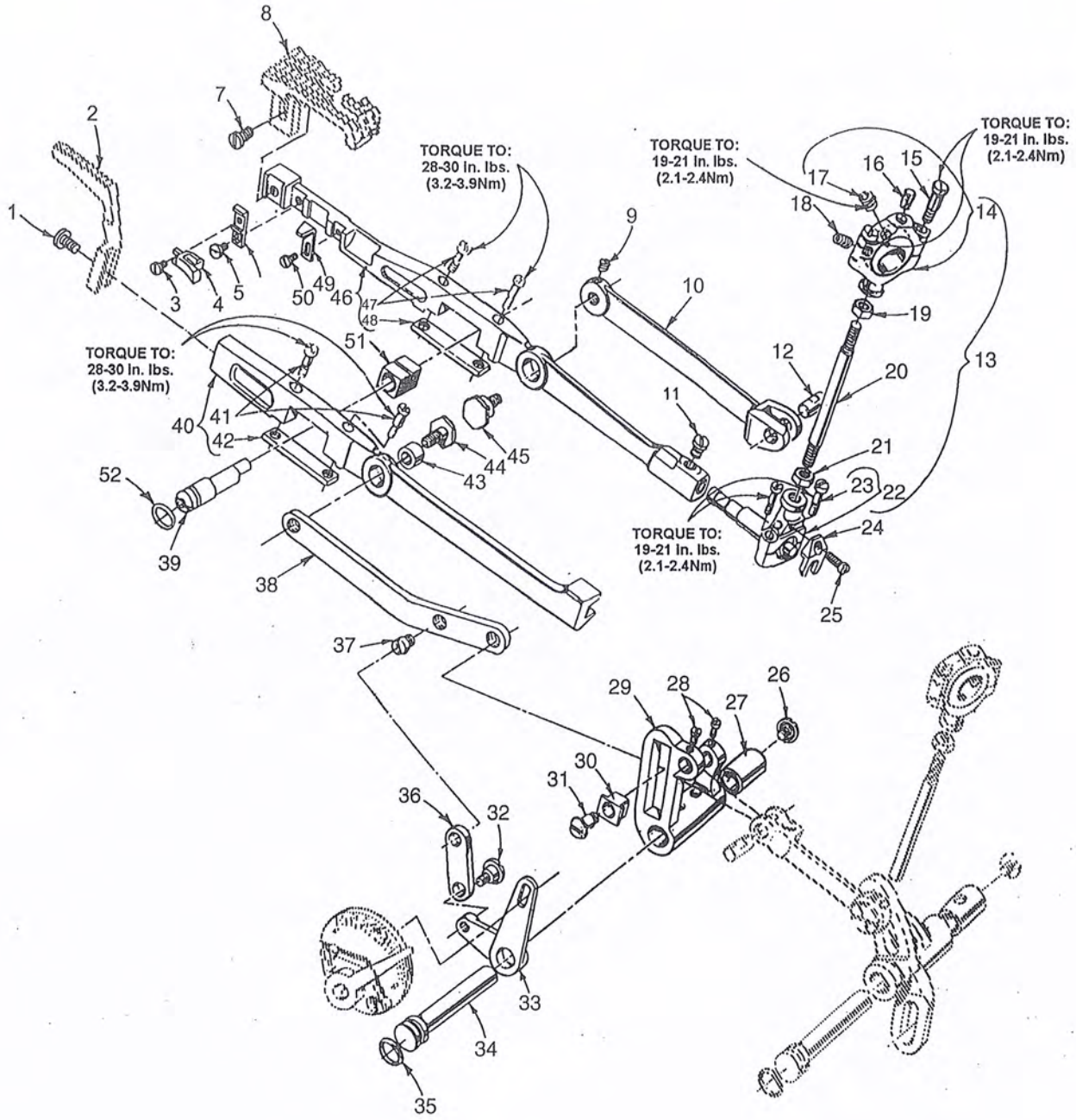

DESCRIPTION

1	3588A259	Screw	1
2	3588A260	Differential Feed Dog(see page 59)	1
3	3588A261	Screw	1
4	3588A262	Needle Guard	1
5	3588A263	Screw	1
6	3588A264	Needle Guard holder	1
7	3588A265	Screw	1
8	3588A266	Main Feed Dog(see Page 59)	1
9	3588A267	Screw	1
10	3588A268	Main Feed Bar Driving Link	1
11	3588A269	Screw	1
12	3588A270	Link Pin	1
13	3588A271	Feed Lift Eccentric Assembly ,for styles 35800DNU,DRU	1
			1
14	3588A273	Feed Lift Eccentric Assembly Ball Joint,for A3588-304	1
	3588A274	Feed Lift Eccentric Assembly Ball Joint,for A3588B-304	1
15	3588A275	Screw	2
16	3588A276	Oil Wick	1
17	3588A277	Set Screw	2
18	3588A278	Spot Screw	1
19	3588A279	Nut,left thread	1
20	3588A280	Connecting Rod	1
21	3588A281	Nut,right thread	1
22	3588A282	Ball Joint ,complete	1
23	3588A283	Screw	2
24	3588A284	Ball Fork	1
25	3588A285	Screw	1
26	3588A286	Screw	1
27	3588A287	Bushing ,for feed rocker shaft	1
28	3588A288	Screw	2
29	3588A289	Feed Rocker	1
30	3588A290	Differential Feed Driving Link Slide Block	1
31	3588A291	Differential Feed Bar Driving Link Stud	1
32	3588A292	Screw	1
33	3588A293	Differential Feed Adjusting Lever	1
34	3588A294	Feed Rocker Shaft	1
35	3588A295	"O"Ring	1
36	3588A296	Differential Feed Bar Driving Link	1
37	3588A297	Screw	1
38	3588A298	Differentail Feed Bar Driving Link	1
39	3588A299	Feed Bar Eccentric Stud	1
40	3588A300	Differentail Feed Bar	1
41	3588A301	Screw	2
42	3588A302	Feed Bar Plate	1
43	3588A303	Bushing	1
44	3588A304	Differential Feed Bar Driving Link Stud	1
45	3588A305	Main Feed Bar Eccentric Driving Stud	1
46	3588A306	Main Feed Bar	1
47	3588A307	Screw	2
48	3588A308	Feed Bar Plate	1
49	3588A309	Main Feed Dog Support	1
50	3588A310	Screw	1

DIFFERENTIAL FEED BAR, MAIN FEED BAR, FEED LIFT ECCENTRIC ASSEMBLY FOR DIFFERENTIAL FEED (CONT)

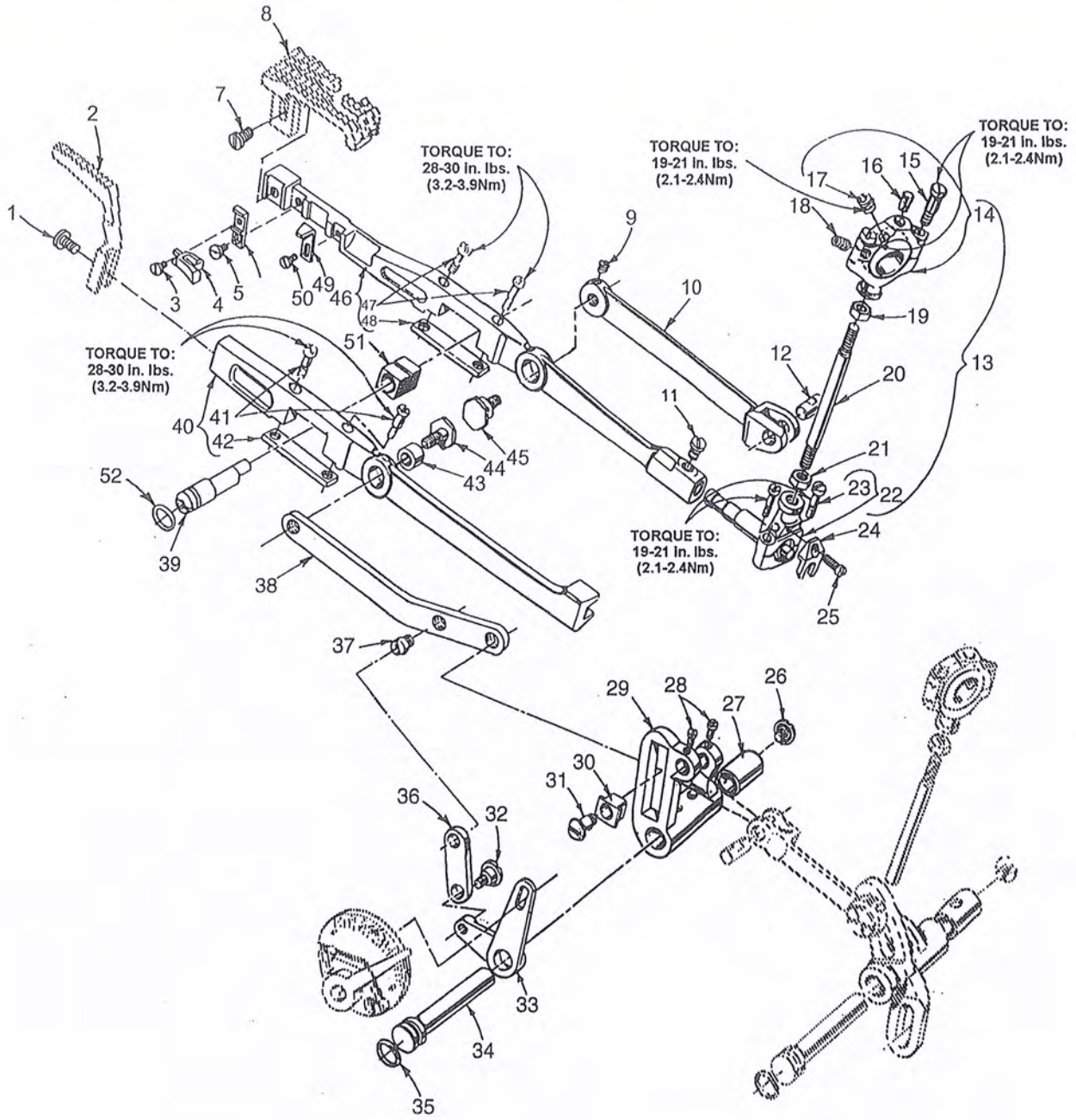

		DESCRIPTION	
51	3588A311	Feed Bar Slide Block	1
52	3588A312	"O"Ring	1

FEED DRIVE COMPONENTS, LOOPER DRIVE COMPONENTS AND LOOPERS FOR PLAIN FEED

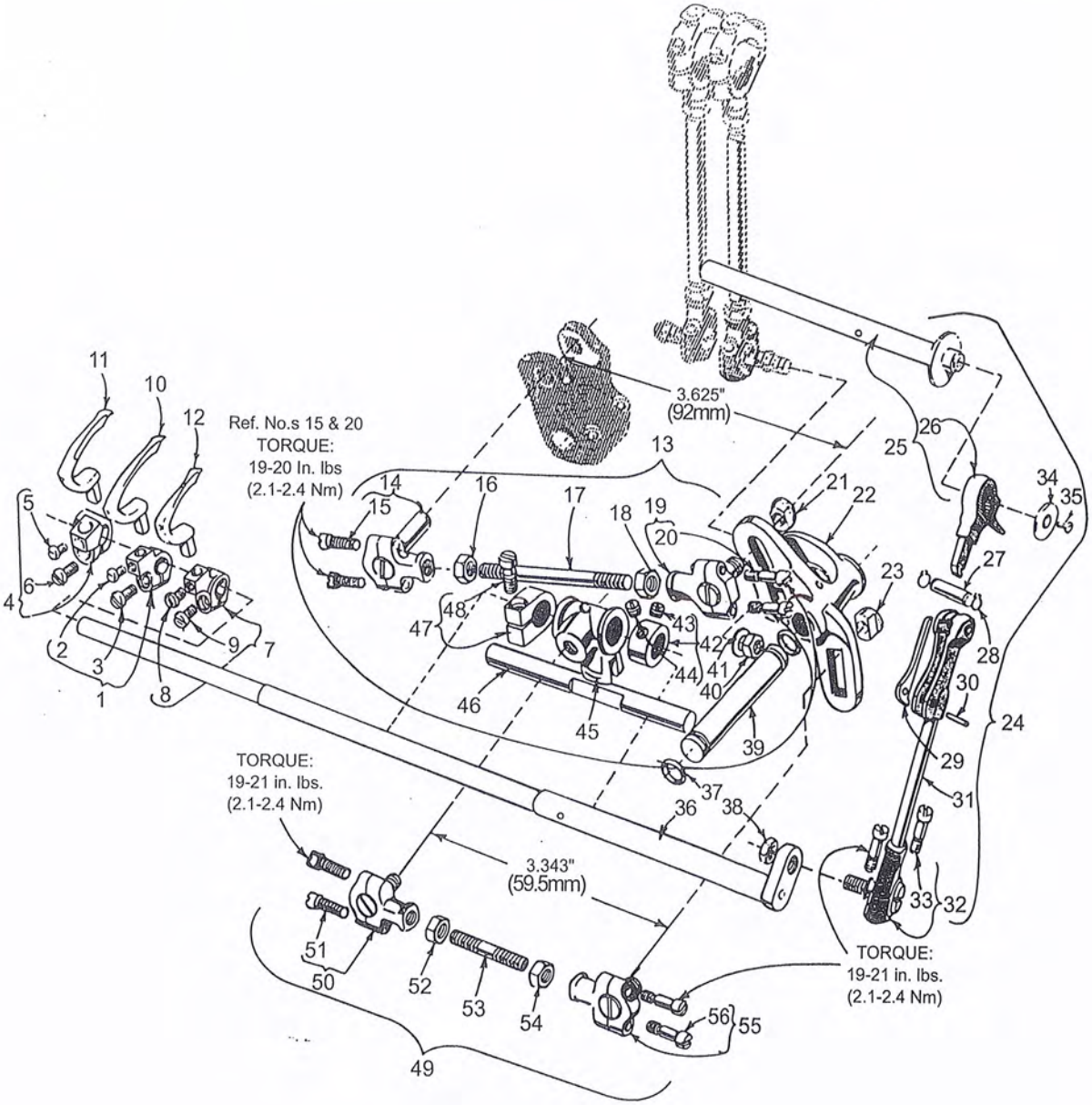

DESCRIPTION

1	3588B110	Looper Holder, for middle looper, marked"D"	1
2	3588B111	Screw	1
3	3588B112	Screw	1
4	3588B113	Looper Holder, for left looper, marked"C"	1
5	3588B114	Screw	1
6	3588B115	Screw	1
7	3588B116	Looper Holder, for right looper, marker"A"	1
8	3588B117	Screw	1
9	3588B118	Screw	1
10	3588B119	Looper, middle, marked"AV"	1
11	3588B120	Looper ,left ,marked"AY"	1
12	3588B121	Looper, right, marked"AU"	1
13	3588B122	Feed Rocker Connecting Rod Assembly	1
14	3588B123	Ball Joint	1
15	3588B124	Screw	2
16	3588B125	Nut, right thread	1
17	3588B126	Connecting Rod	1
18	3588B127	Nut, left thread	1
19	3588B128	Ball Joint	1
20	3588B129	Screw	2
21	3588B130	Nut	1
22	3588B131	Feed Rocker and Looper Aviod Lever	1
23	3588B132	Nut	1
24	3588B133	Looper Drive Connecting Rod Assembly	1
25	3588B134	Main Shaft Assembly	1
26	3588B135	Looper Drive Connection	1
27	3588B136	Hinge Pin	1
28	3588B137	Tru-Arc Ring	2
29	3588B138	Locking Spring	1
30	3588B139	Pin	1
31	3588B140	Looper Drive Connecting Rod	1
32	3588B141	Ball Joint, looper Lever Shaft	1
33	3588B142	Screw	2
34	3588B143	Washer	1
35	3588B144	Screw	1
36	3588B145	Feed Rocker and Looper Lever shaft	1
37	3588B146	Oil seal Ring	2
38	3588B147	Nut	1
39	3588B148	Looper Rocker Shaft	1
40	3588B149	Nut	1
41	3588B150	Washer	1
42	3588B151	Looper shaft Collar	1
43	3588B152	Screw	1
44	3588B153	Screw	1
45	3588B154	Looper Rocker Shaft Cross Head	1
46	3588B155	Cross Head Guide Shaft	1
47	3588B156	Thrust Collar	1
48	3588B157	Screw	1
49	3588B158	Connecting Rod Assembly	1
50	3588B159	Ball Joint	1
51	3588B160	Screw	2
52	3588B161	Nut ,right thread	1

FEED DRIVE COMPONENTS, LOOPER DRIVE COMPONENTS AND LOOPERS FOR PLAIN FEED (CONT)

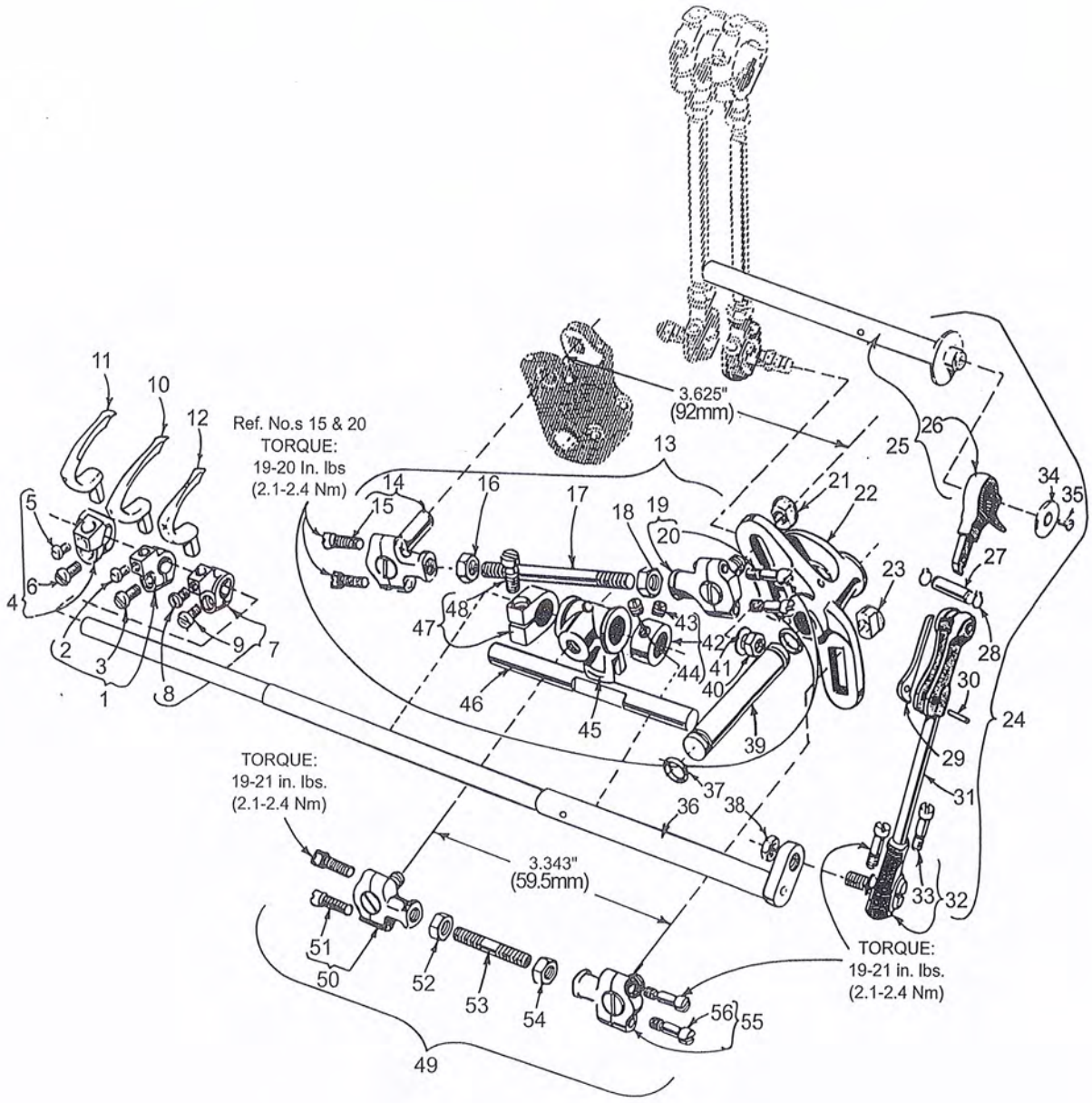

		DESCRIPTION	
53	3588B162	Connecting Rod	1
54	3588B163	Nut, left thread	1
55	3588B164	Ball Joint	1
56	3588B165	Screw	2

LOOPERS, LOOPER HOLDERS, FEED DRIVE COMPONENTS AND LOOPER AVOID COMPONENTS FOR DIFFERENTIAL FEED

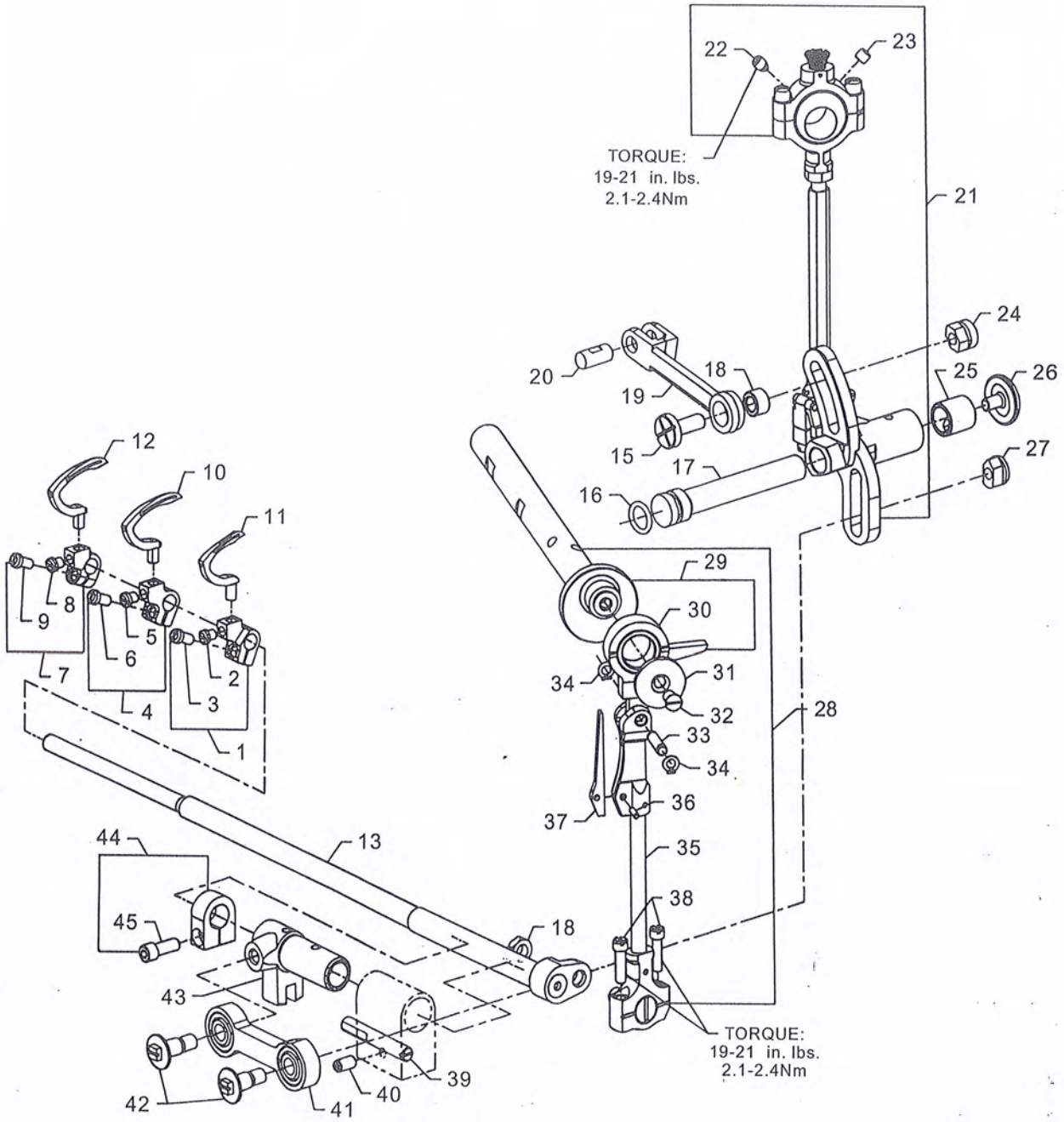

DESCRIPTION

1	3588A313	Looper Holder, for Right looper, marked"A"	1
2	3588A314	Screw	1
3	3588A315	Screw	1
4	3588A316	Looper Holder, for Middle looper, marked"D"	1
5	3588A317	Screw	1
6	3588A318	Screw	1
7	3588A319	Looper Holder, for left looper , marker "C"	1
8	3588A320	Screw	1
9	3588A321	Screw	1
10	3588A322	Looper, middle, marked"AV"	1
11	3588A323	Looper, right, marked"AU"	1
12	3588A324	Looper, left, marked"AY"	1
13	3588A325	Looper Rocker Shaft	1
14	3588A326	Nut	1
15	3588A327	Feed Rocket Driving link Screw	1
16	3588A328	Oil Seal Ring	1
17	3588A329	Feed Driving Shaft	1
18	3588A230	Bushing, for feed rocker driving link	1
19	3588A231	Feed Rocket Driving link	1
20	3588A232	Link Pin	1
21	3588A233	Feed Driving Assembly	1
22	3588A234	Screw	1
23	3588A235	Screw	1
24	3588A236	Nut	1
25	3588A237	Bushing	1
26	3588A238	Screw	1
27	3588A239	Nut	1
28	3588A240	Looper Drive Connecting Rod Assembly	1
29	3588A341	Main Shaft Complete	1
30	3588A342	Looper Drive Connection	1
31	3588A343	Shaft Stop Washer	1
32	3588A344	Screw	1
33	3588A345	Hinge Pin	1
34	3588A346	Truarc Ring	2
35	3588A347	Looper Drive Connecting Rod	1
36	3588A348	Pin	1
37	3588A349	Locking Spring	1
38	3588A350	Screw	2
39	3588A351	Stud, For Looper Shaft Sleeve	1
40	3588A352	Screw	1
*41	3588A353	Connecting Rod Bearing Shell	1
*42	3588A354	Screw	1
43	3588A355	Looper Shaft Sleve	1
44	3588A356	Looper Shaft Collar	1
45	3588A357	Screw	1

UPPER ROLLER FEED, FOOT LIFTER AND THREAD TENSION PARTS.

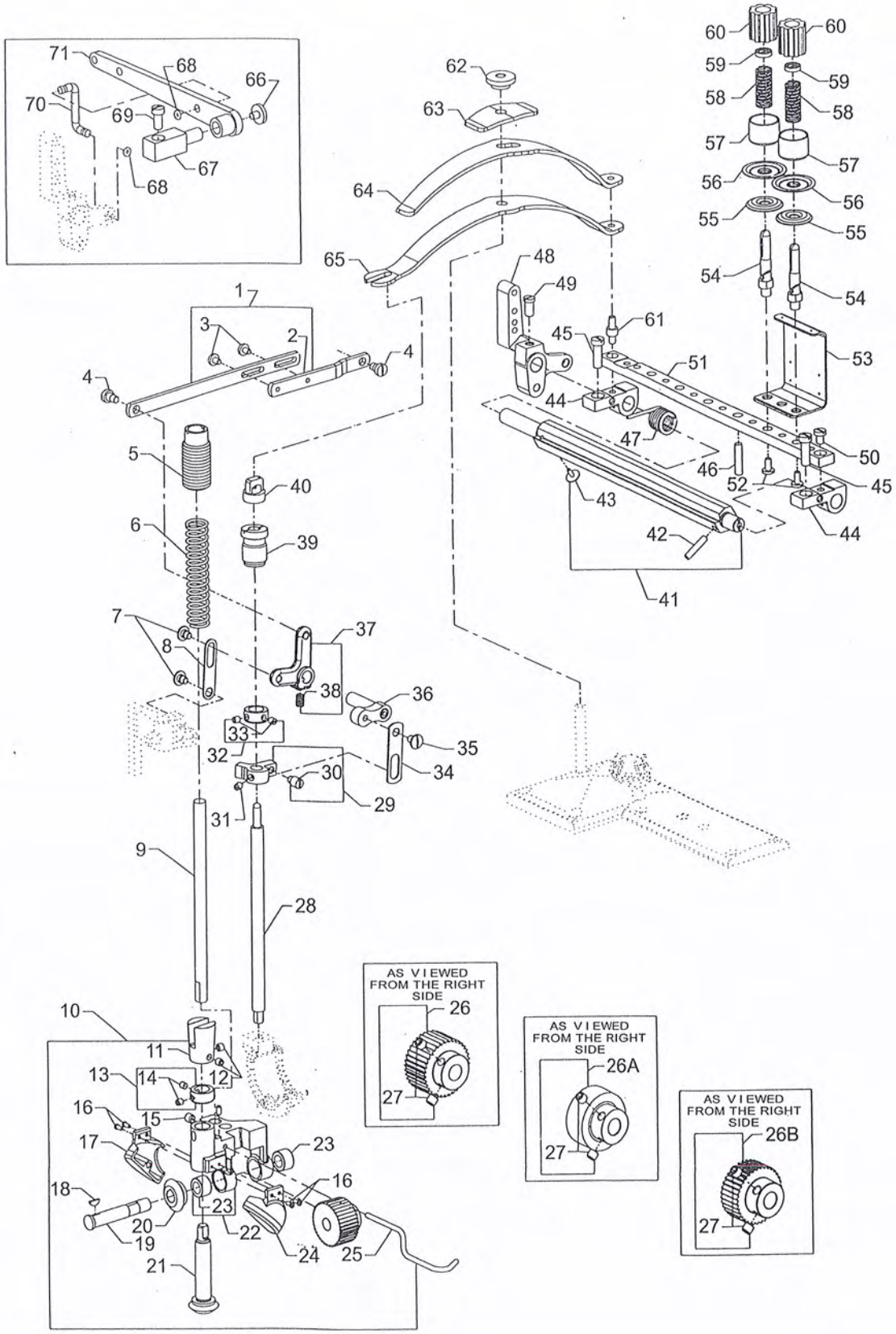

		DESCRIPTION	
1	3588A358	Lifter Lever Link Assembly	1
2	3588A359	Lifter lever Link	1
3	3588A360	Screw	2
4	3588A361	Screw	2
5	3588A362	Puller Bar Knob, rear	1
6	3588A363	Spring, puller bar	1
7	3588A364	Screw	2
8	3588A365	Lifter Lever Bell Crank Link	1
9	3588A366	Roller Presser Bar	1
10	3588A367	Puller Assembly, for styles 35800DNU, DRU	1
			1
			1
11	3588A370	Feed Roller Lower Connection	1
12	3588A371	Screw	2
13	3588A372	Drive Gear Collar	1
14	3588A373	Screw	2
15	3588A374	Screw	1
16	3588A375	Screw	4
17	3588A376	Gear guard, rear	1
18	3588A377	Woodruff Key	1
19	3588A378	Feed Roller Shaft	1
20	3588A379	Drive Miter Gear	1
21	3588A380	Drive Miter Gear	1
22	3588A381	Feed Roller Frame	1
23	3588A382	Needle bearing	2
24	3588A383	Gear guard, front	1
25	3588A384	Air Blower Tube	1
26	3588A385	Feed Roller ,steel (.468 wide)for styles35800DNU,DRU	1
			1
	3588A387	Feed Roller ,rubber (.468 wide)for styles35800DNU,DRU	1
			1
	3588A389	Feed Roller, reverse teeth(.468 wide)for styles35800DNU,DRU	1
			1
27	3588A391	Screw .	2
28	3588A392	Presser Bar	1
29	3588A393	Presser Bar Lifter and Guide	1
30	3588A394	Screw	1
31	3588A395	Screw	1
32	3588A396	Collar	1
33	3588A397	Screw	2
34	3588A398	Lift Lever Connecting Link	1
35	3588A399	Screw	1
36	3588A400	Presser Bar Lifter Lever	1
37	3588A401	Lifter Lever Bell Crank	1
38	3588A402	Screw	1
39	3588A403	Presser Bar Spring and Regulator	1
40	3588A404	Presser Bar Knob	1
41	3588A405	Tension Release Shaft	1
42	3588A406	Pin	1
43	3588A407	Screw	1
44	3588A408	Tension Plate Bracket	2
45	3588A409	Screw	2

UPPER ROLLER FEED,FOOT LIFTER AND THREAD TENSION PARTS (CONT)

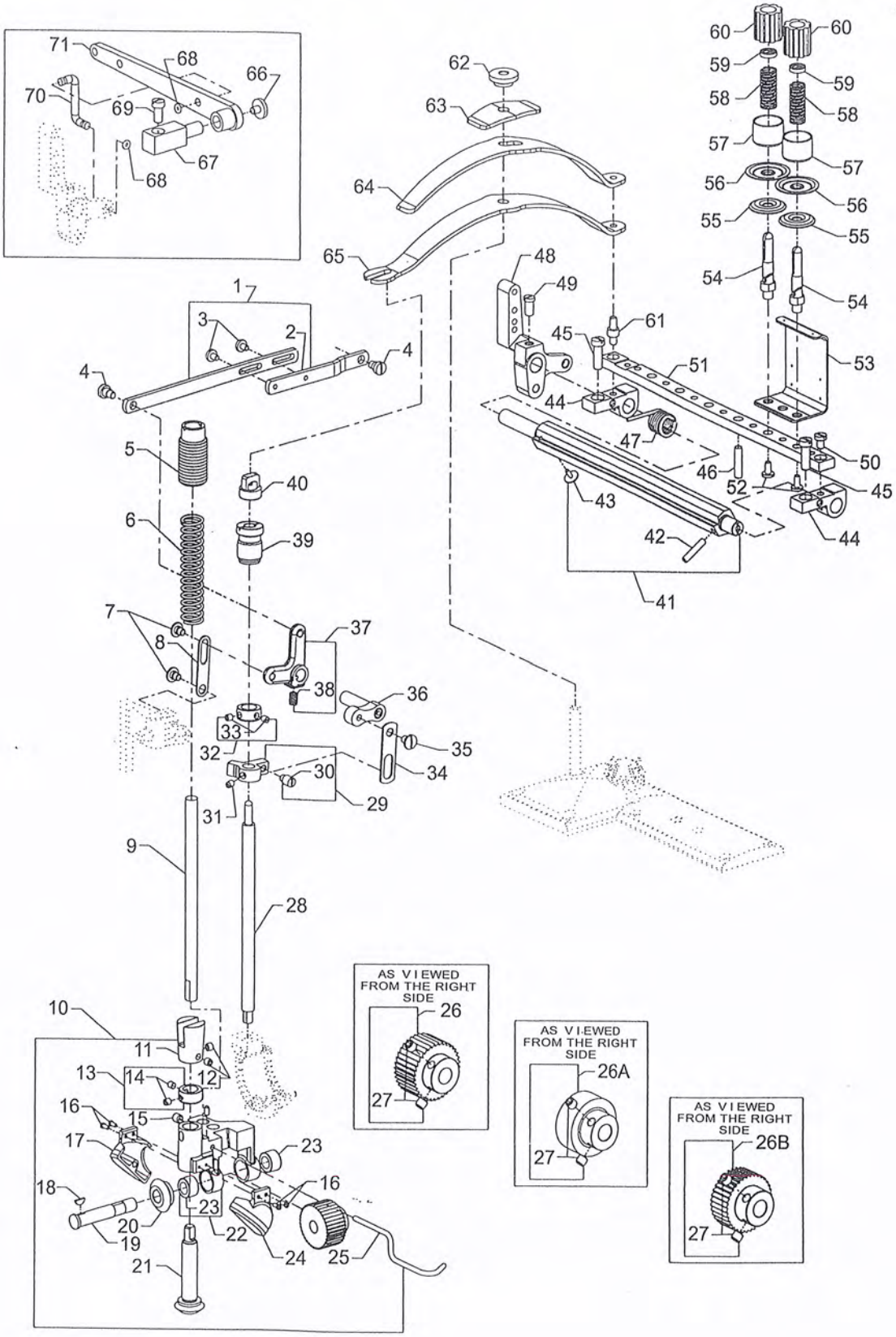

DESCRIPTION

46	3588A410	Tension Disc Release Pin	7
47	3588A411	Tension Release Shaft Spring	1
48	3588A412	Lifter Lever	1
49	3588A413	Screw	1
50	3588A414	Screw	1
51	3588A415	Tension Support	1
52	3588A416	Screw	6
53	3588A417	Tension Thread Eyelet	3
54	3588A418	Tension Post	6
55	3588A419	Tension Disc ,small	6
56	3588A420	Tension Disc,large	6
57	3588A421	Shield ,tension spring	6
58	3588A422	Looper Thread Tension Spring,for looper	3
	3588A423	Needle Thread Tension Spring,for needle	3
59	3588A424	Tension Post Ferrule	6
60	3588A425	Tension Nut	6
61	3588A426	Presser Spring Rest	1
62	3588A427	Presser Regulating Screw	1
63	3588A428	Presser Spring Plate	1
64	3588A429	Presser Spring,Upper	1
65	3588A430	Presser Spring ,Lower	1
66	3588A431	Screw	1
67	3588A432	Presser Foot Lifter Bearing Bracket	1
68	3588A433	Retaining Ring	2
69	3588A434	Screw	1
70	3588A435	Lifter Lever Connecting Link	1
71	3588A436	Presser Foot Connecting Lifter Lever	1

PULLY, CRANKSHAFT, CLUTCH AND CLUTCH DRIVING MECHANISM

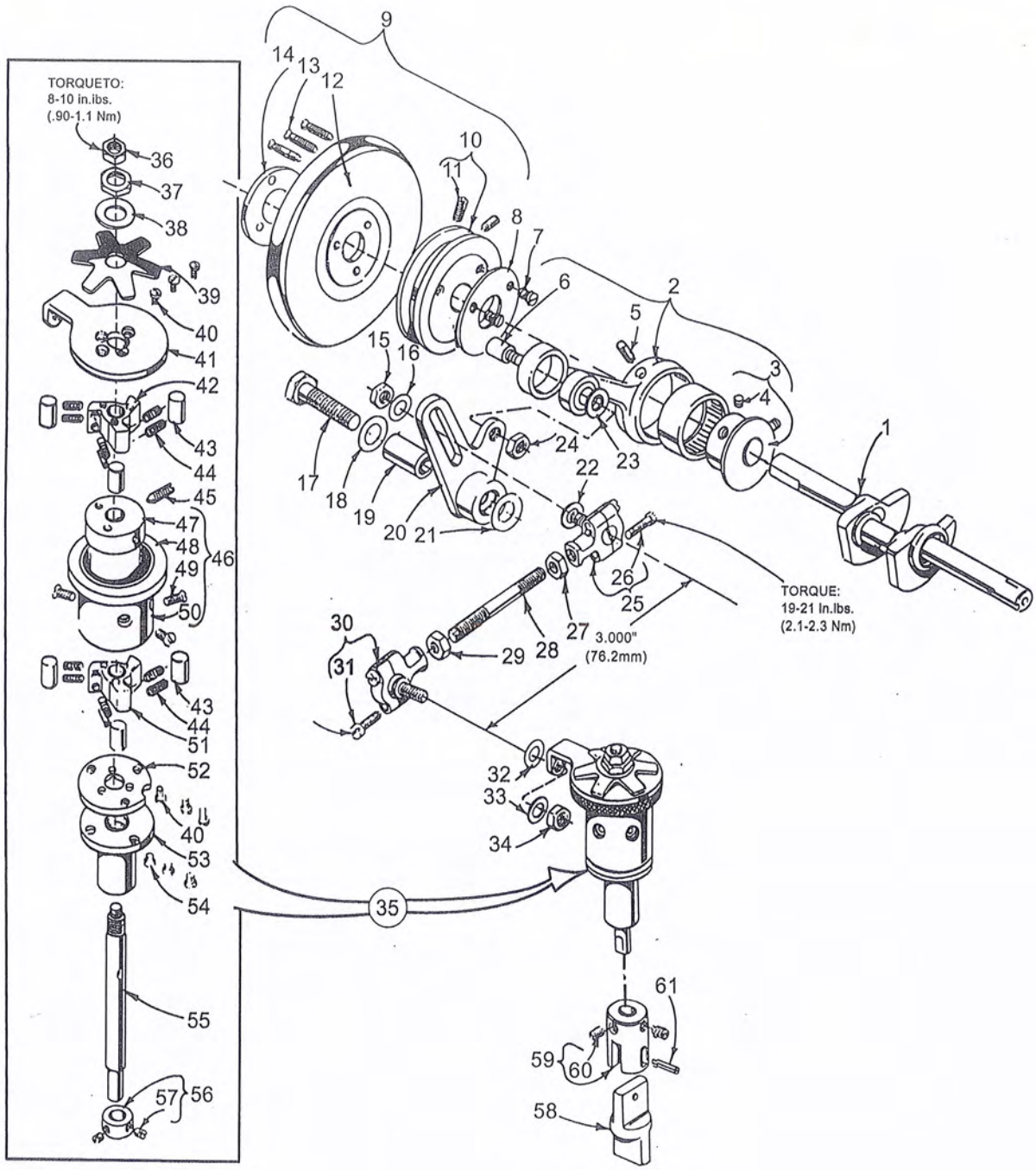

DESCRIPTION

1	3588A437	Crankshaft	1
2	3588A438	Connecting Rod and Clutch Driving Eccentric Assembly	1
3	3588A439	Eccentric	1
4	3588A440	Screw	2
5	3588A441	Oil Wick	1
6	3588A442	Shoulder Screw	1
7	3588A443	Screw	3
8	3588A444	Washer	1
9	3588A445	Pulley Assembly	1
10	3588A456	Pulley	1
11	3588A457	Set Screw	2
12	3588A458	Handwheel	1
13	3588A459	Screw	3
14	3588A460	Clamp Plate	1
15	3588A461	Nut	1
16	3588A462	Washer	1
17	3588A463	Screw	1
18	3588A464	Washer	1
19	3588A465	Segment Lever Bushing	1
20	3588A466	Clutch Driving Segment Lever	1
21	3588A467	Washer	1
22	3588A468	Washer	1
23	3588A469	Washer	1
24	3588A470	Nut	1
25	3588A471	Ball Joint Assembly, right	1
26	3588A472	Screw	2
27	3588A473	Nut, left hand thread	1
28	3588A474	Roller Clutch Connecting Rod	1
29	3588A475	Nut, right hand thread	1
30	3588A476	Roller Clutch Ball Joint Assembly , left	2
31	3588A477	Screw	2
32	3588A478	Washer	1
33	3588A479	Washer	1
34	3588A480	Nut	1
35	3588A481	Constant Wedge Angle Clutch Assembly	1
36	3588A482	Nut	1
37	3588A483	Nut	1
38	3588A484	Washer	1
39	3588A485	Brake Spring	1
40	3588A486	Screw	6
41	3588A487	Clutch Drive Lever	1
42	3588A488	Clutch Disc, upper	1
43	3588A489	Clutch Roller	6
44	3588A490	Clutch Roller Spring and Wear Cap	12
45	3588A491	Spot Screw	1
46	3588A492	Barrel Assembly	1
47	3588A493	Barrel Core	1
48	3588A494	Drive Lever Brake	1
49	3588A495	Screw	3
50	3588A496	Barrel	1
51	3588A497	Clutch Disc, lower	1
52	3588A498	Locking Spacer Plate	1

PULLY, CRANKSHAFT,CLUTCH AND CLUTCH DRIVING MECHANISM (CONT)

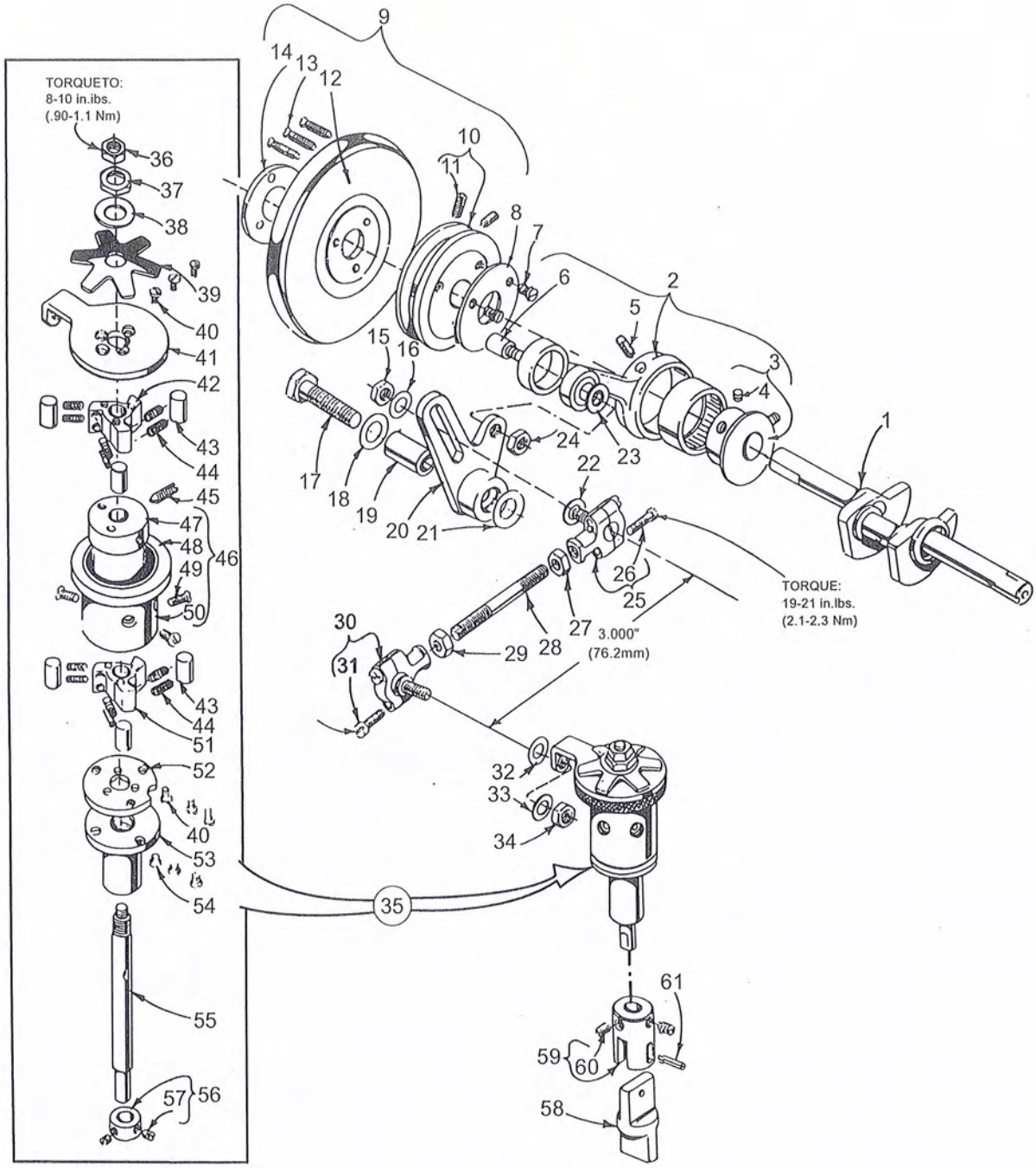

		DESCRIPTION	
53	3588A499	Lower Bearing	1
54	3588A500	Screw	3
55	3588A501	Feed Drive Shaft	1
56	3588A502	Collar	1
57	3588A503	Screw	2
58	3588A504	Feed Roller Drive Floating Connection	1
59	3588A505	Feed Roller Connection, upper	1
60	3588A506	Screw	2
61	3588A507	Roll Pin	1
62	3588A508	Washer	1

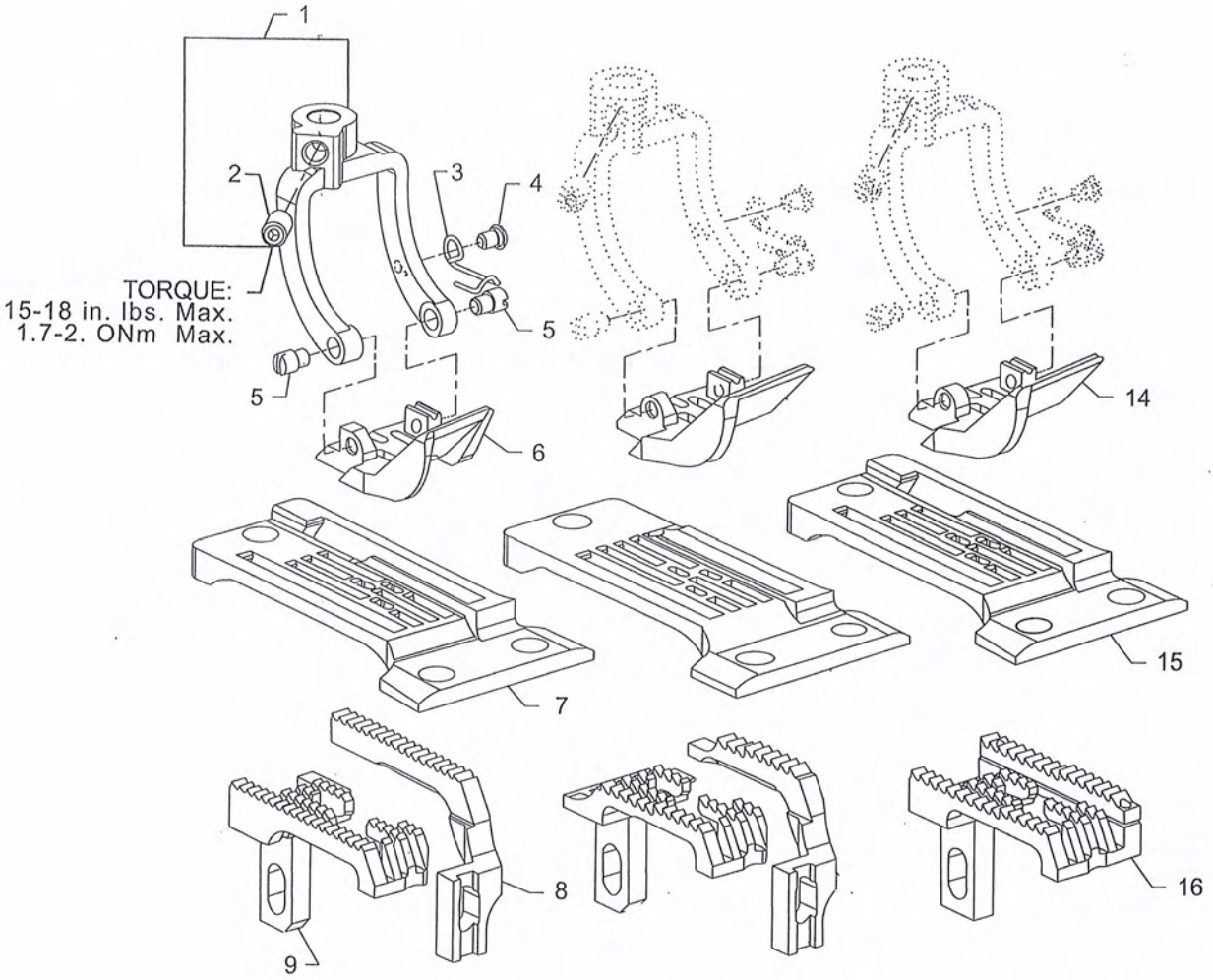
1
2
3
4
5
5
TORQUE:
15-18 in. lbs. Max.
1.7-2. ONm Max.
6
14
7
15
8
16
9

DESCRIPTION

1	3588A509	Presser Foot Fork	1
2	3588A510	Screw	1
3	3588A511	Spring	1
4	3588A512	Screw	1
5	3588A513	Screw	2
6	3588A514	Presser Foot, for Style 35800DNU8	1
	3588A515	Presser Foot, for Style 35800DNU9	1
7	3588A516	Throat Plate, for Style 35800DNU8.	1
	3588A517	Throat Plate, for Style 35800DNU9	1
8	3588A518	Differential Feed Dog, for Styles 35800DNU8, DNU9	1
9	3588A519	Main Feed Dog, for Styles 35800DNU8, DNU9,	1
14	3588A526	Presser Foot, for 8 gauge Styles 35800DRU	1
	3588A527	Presser Foot, for 9gauge Styles 35800DRU	1
15	3588A528	Throat Plate, marked "AG-8", for 8 guage, Styles 35800DRU.	1
	3588A529	Throat Plate, marked "AG-9", for 9 guage, Styles 35800DRU.	1
16	3588A530	Feed Dog, for 8 and 9 gauge, styles 35800DRU,	1

THREAD STAND

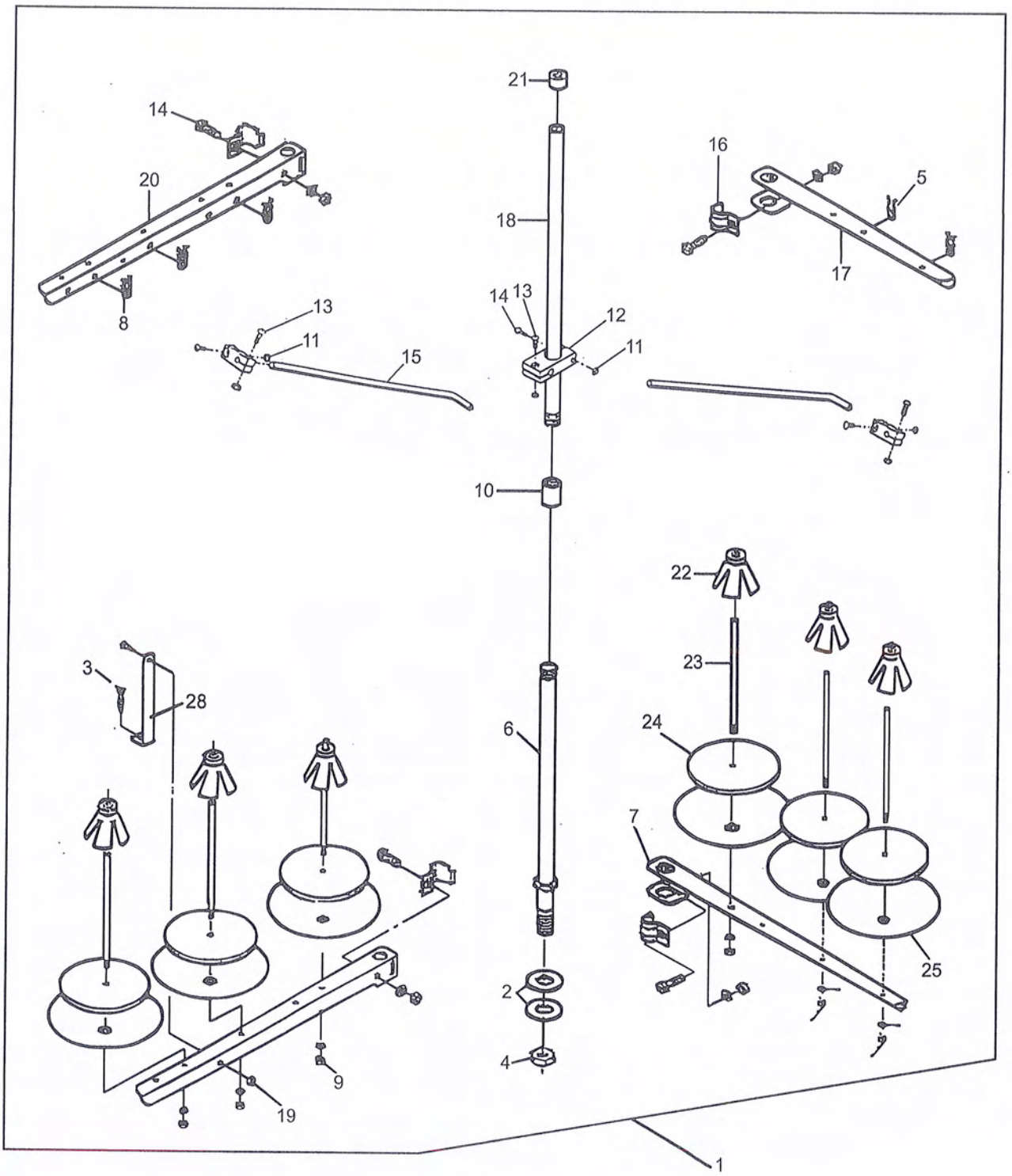

DESCRIPTION

1	3588AB01	Thread Stand ,complete	1
2	3588AB02	Washer	2
3	3588AB03	Screw	1
4	3588AB04	Nut	1
5	3588AB05	Screw	2
6	3588AB06	Thread Stand Rod,short	1
7	3588AB07	Base Bracket	1
8	3588AB08	Screw	3
9	3588AB09	Nut	6
10	3588AB10	Joint	1
11	3588AB11	Nut	8
12	3588AB12	Holder,large	2
13	3588AB13	Screw	6
14	3588AB14	Screw,long	2
15	3588AB15	Thread Guide Rod	2
16	3588AB16	Holder,thread guide	2
17	3588AB17	Thread Guide	2
18	3588AB18	Thread Stand Rod,long	1
19	3588AB19	Thread Eyelet	34
20	3588AB20	Thread Guide	1
21	3588AB21	Cap	1
22	3588AB22	Spool Retainer	6
23	3588AB23	Spool Pin	6
24	3588AB24	Felt Disc	6
25	3588AB25	Support Disc	6
26	3588AB26	Spring Washer	6
27	3588AB27	Nut	14
28	3588AB28	Support board	1

ACCESSORIES

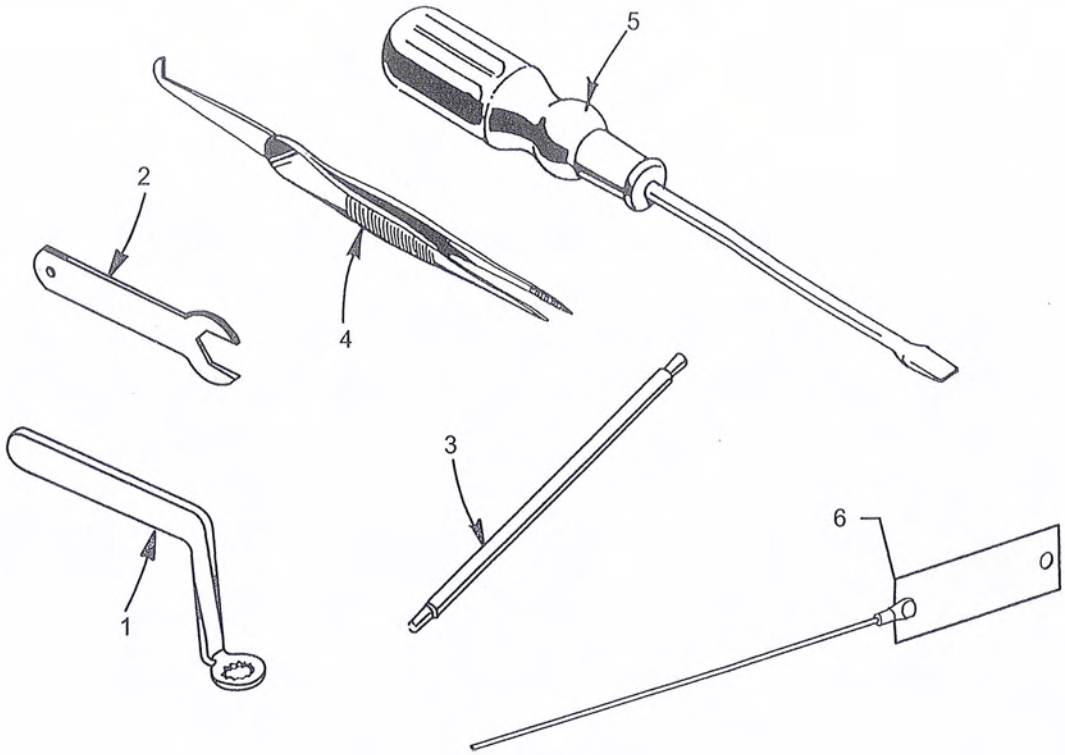

DESCRIPTION

1	3588AB28	Wrench, for looper avoid	1
2	3588AB29	Wrench, for feed bar	1
3	3588AB30	Needle Head Torque Rod	1
4	3588AB31	Thread Tweezers	1
5	3588AB32	Screwdriver	1
	3588AB33	Oil Can (not shown)	1
	3588AB34	Oil Nozzle (not shown)	1
	3588AB35	Plastic Cover (not shown)	1
	3588AB36	Allen Wrench, size 1/4"(not shown)	1
	3588AB37	Allen Wrench, size 3/8"(not shown)	1
	3588AB38	Allen Wrench, size 1/2"(not shown)	1
6	3588AB39	Threading Wire	1
7	3588AB40	Wrench, set (not shown)	1
8	3588AB50	Folder, one (not shown)	1