GLOBAL

LP 9916

High Postbed, 2 needle walking foot sewing machine

Instruction & Parts manual

www.globalsew.com

info@globalsew.com

--- CONTENTS ---

Instruction Manual

- **Preparation for operation** 1

1、Safety precautions 1

2、Precautions before starting operation 1

3、Precautions for operating conditions 1

- **Cautions on use** 2

1、Lubrication (1) 2

2、Lubrication (2) 2

3、Oiling condition 2

4、Cautions on operation 2

Operation 2

1、Installation of needles 2

2、Winding of bobbin thread 3

3、Selection of thread 3

4、Threading of needle threads 3

5、Adjustment of stitch length and reverse sewing 3

6、Balance of thread tension 3

7、Needle thread tension 4

8、Adjustment of presser foot pressure 4

9、Timing between rotating hook motion and needle motion 4

10、Adjustment of feed dog height 4

11、Relationship between rotating hook motion and take-up lever motion 5

12、Relationship between needle motion and feed dog motion 5

13、Safety clutch device 6

14、Upper feed adjustment 6

15、Outside presser foot and inside presser vertical stroke adjustment 6

16、Adjustment 7

16、Installation of Belt cover 7

Parts Catalog

A、ARM BED AND ITS ACCESSORIES 8

B、THREAD TENSION REGULATOR MECHANISM 10

C、ARM SHAFT MECHANISM 12
D、UPPER SHAFT & PRESSER FOOT MECHANISM 14
E、TAKE-UP THREAD AND ARM SHAFT MECHANISM 17
F、STITCH REGULATOR MECHANISM 20
G、LOWER SHAFT & FEED ROCK SHAFT MECHANISM 22
H、FEED BAR MECHANISM 25
I、HOOK SADDLE MECHANISM 27
J、OIL LUBRICATION MECHANISM 29
K、ACCESSORIES 31

■ Preparation for operation:

1. Safety precautions:

1) When turning the power on, keep your hands and fingers away from the area around/under the needle and the area around the pulley.

2) Power must be turned off when the machine is not in use, or when the operator leaves the seat.

3) Power must be turned off when tilting the machine head, installing or removing the "V" belt, adjusting the machine, or when replacing.

4) Avoid placing fingers, hairs, bars etc. near the pulley, "V" belt, bobbin winder pulley, or motor when the machine is in operation.

5) Do not insert fingers into the thread take-up cover, under/around the needle, or pulley when the machine is in operation.

6) If a belt cover, finger guard, eye guard are installed, do not operate the machine without these safety devices.

2. Precautions before starting operation:

1) Never operate the machine before filling the machine's oil pan.

2) When a new sewing machine is first turned on, verify the rotational direction of the pulley with the power on.

3) Verify the voltage and phase (single or three) with those given on the machine nameplate.

3. Precautions for operating conditions:

1) Avoid using the machine at abnormally high temperatures (35℃ or higher) or low temperatures (5℃ or lower).

2) Avoid using the machine in dusty conditions.

Overall view of assembled sewing machine

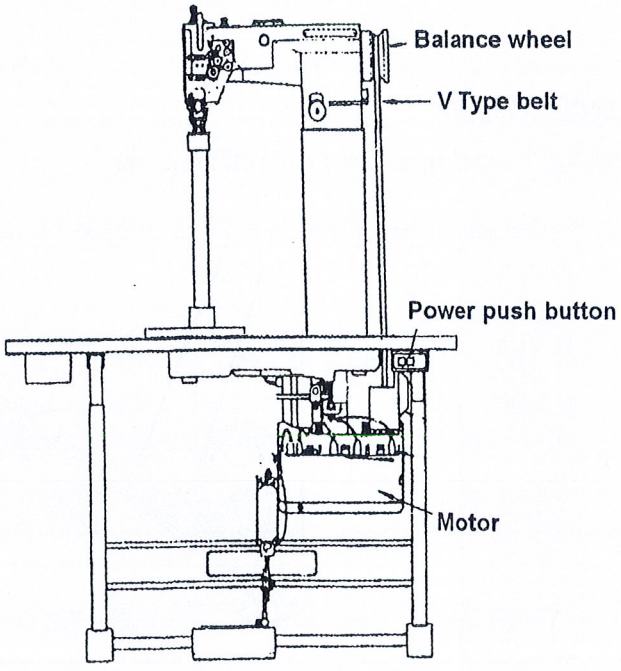

■ Cautions on use

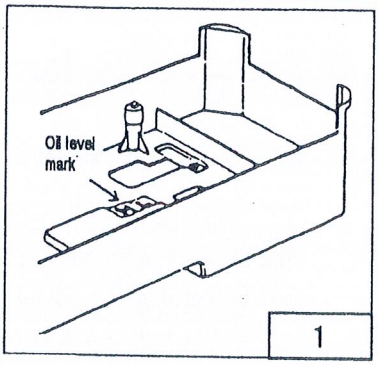

1

1. Oiling (1) (Fig.1)

Filling the oil reservoir with oil up to "H" mark. Oil level should be periodically checked. If oil; level is found below "L"; level replenish oil to "H" level.

Use white spindle oil.

2. Oiling (2) (Fig.2、Fig.3)

When a new sewing machine is used for the first time, or sewing machine left out of use for considerably long time is used again, replenish a suitable amount of oil to the portions indicated by arrow in the below figure.

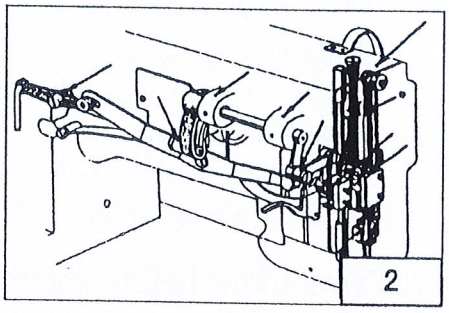
2

3. Oiling condition (Fig.3)

See dripping of oil through the oil sight hole to check oiling condition during operation.

4. Cautions on operation

1) When the power is turned on or off, keep foot away from the pedal.

2) It should be noted that the brake might not work when the power is interrupted or power failure occurs during sewing machine operation.

3) Since dust in the control box might cause malfunction or control troubles, be sure to keep the control box cover close during operation.

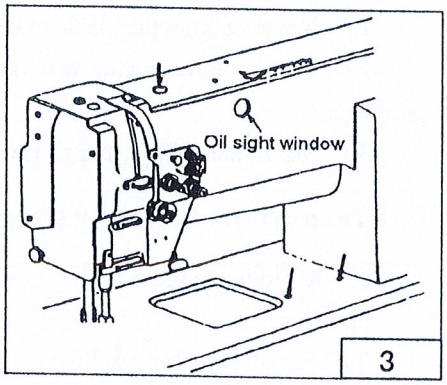

3

4) Do not apply a Multimeter to the control circuit for checking; Otherwise voltage of Multimeter might damage semiconductor components in the circuit.

■ Operation

1. Installation of needles (Fig.4)

Note: Before installing the needles, be sure to turn off the power.

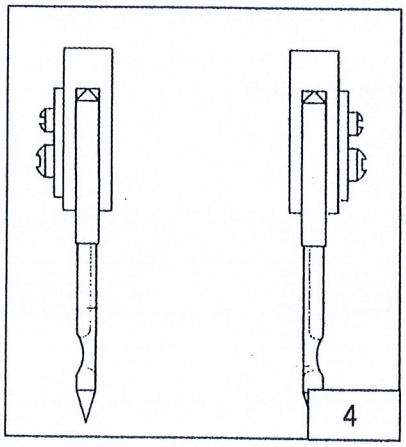
4

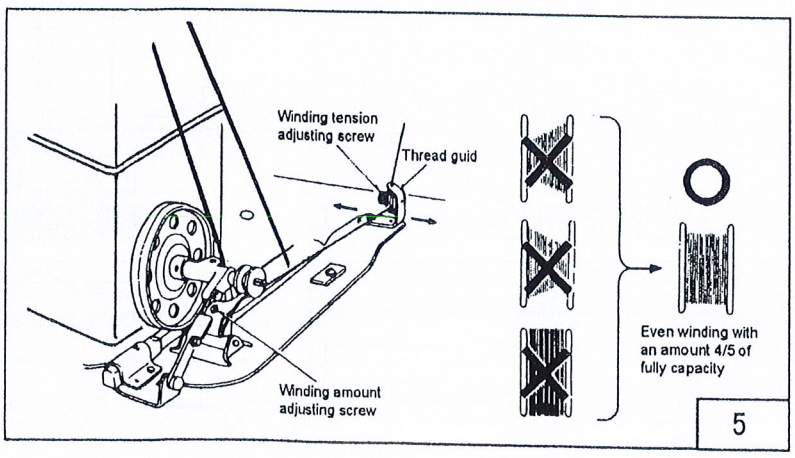

5

2. Winding of bobbin thread (Fig.5)

Note: When bobbin thread is wound, keep the presser foot lifted.

Adjustment:

Tension of wound thread: Slack winding is recommended for polyester thread and nylon thread.

Conically wound thread : Move the thread guide toward smaller diameter of wound thread layer.

Length of wound thread : Loosen the thread length adjusting screw to increase length of thread and tighten the screw to decrease length of thread.

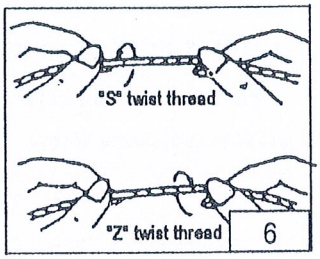

6

3. Selection of thread (Fig.6)

It is recommended to use "S" twist thread in the left needle (viewed from front), and "Z' twist thread in the right needle.

When discriminate use of needle threads is impossible, use "Z" twist thread in both the needles. For bobbin thread, "S" twist thread as well as "Z" twist thread can be used.

4. Threading of needle threads

(1) Pass each needle thread through thread guide A (Fig.7)

Note: When thin slippery thread (polyester Thread or filament thread, for example) is used pass the thread through thread guide B as well.

(2) With the take-up lever located at the upper most position, pass each needle thread in the order shown in the following figure (Fig.8).

Note: Pressing the upper thread-loosening button shown in the figure below opens the saucer of the upper thread tension adjuster, and the upper thread can easily pulled out.

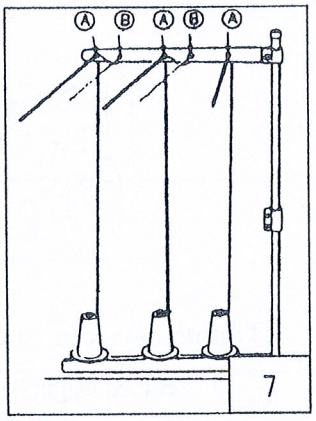

7

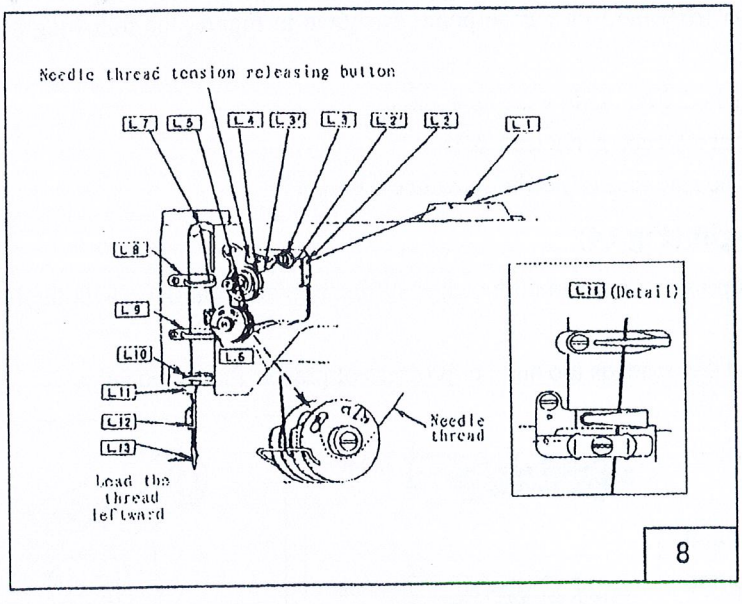

8

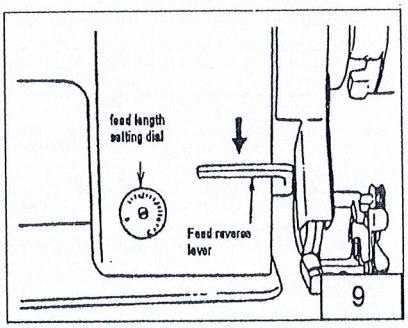

9

5. Adjustment of stitch length and reverse sewing (Fig.9)

1). Rotate the stitch length adjusting dial to change the stitch length.

2). Pressing the stitch length adjusting lever for reverse stitching.

6. Balance of thread tension (Fig.10)

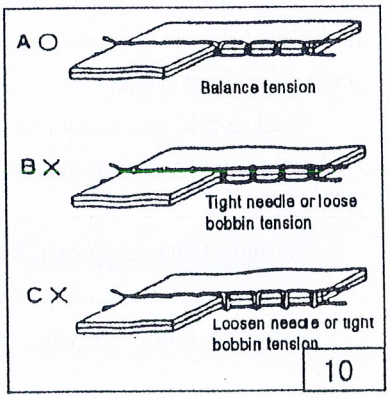

10

7. Needle thread tension (Fig.11)

- Needle thread tension should be adjusted in reference to bobbin thread tension.
- To adjust needle thread tension, turn each tension adjusting nut. Needle thread tension can be also adjusted for special fabric and thread by changing intensity and movable range of slack thread adjusting spring.

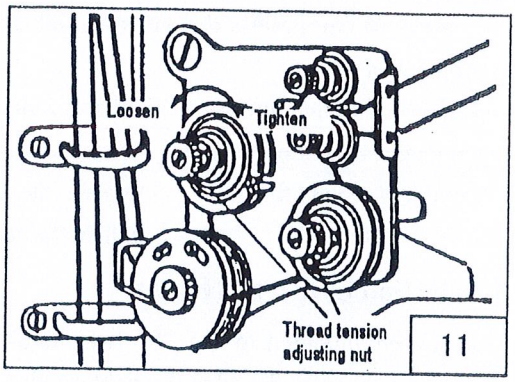

11

8. Adjustment of presser foot pressure (Fig.12)

Pressure to fabric(s) can be adjusted by turning the pressure adjusting screw.

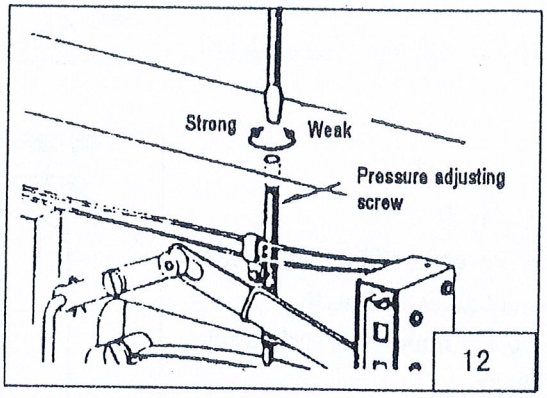

12

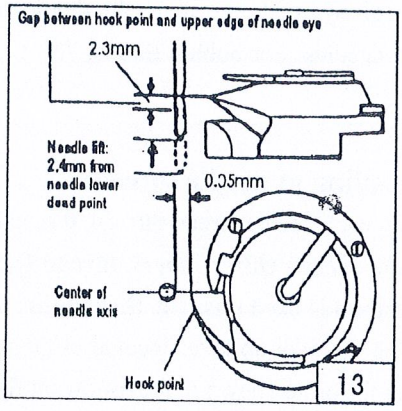

13

9. Timing between rotating hook motion and needle motion (Fig.13)

1) Set feed length (stitch length) to "6" on the feed setting dial.

2) When needle is lifted 2.4mm from the lower dead point, as shown in Figure, the following positional relationship should be maintained.

The upper edge of needle eye should be 2.3mm below the hook point.

- The hook point should be located at the center of needle axis.
- Gap between the hook point and the side face of needle should be 0.05mm.

10. Adjustment of feed dog height (Fig.14)

Height of feed dog and pressure of presser Foot should be adjusted for individual fabric(s) with the following cautions:

- Fabric will be damaged if the feed dog extends too high, or pressure of presser foot is too large.
- Even stitch length cannot be assured if the feed dog is too low or pressure of presser foot is too small.
- Feed dog height should be measured at the point where the needle is at the top position.

For light fabric: Approx 0.8mm
For usual fabric: Approx 1.0mm
For heavy fabric: Approx 1.2mm

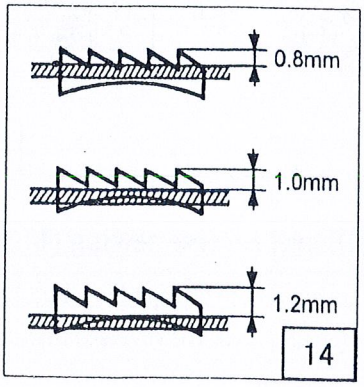

14

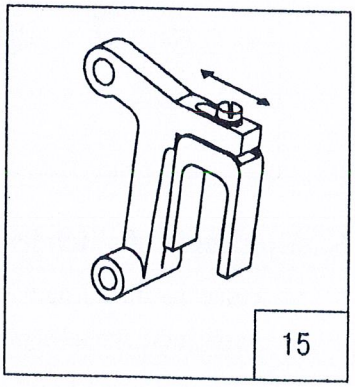
15

Adjustment procedure (Fig.15)

1) Lean the machine head backward.

2) Turn the hand wheel by hand and stop when the feed dog rises to the maximum height.

3) Loosen the feed bar setscrew.

4) Vertically move the feed bar (in the direction indicated by arrow in the figure) to adjust it to adequate height.

5) After the adjustment, tighten the feed bar setscrew.

The feed dog height is factory-adjusted to 1.2mm

11. Relationship between rotating hook motion and take-up lever motion (Fig.16)

When the timing belt (toothed belt) was removed for its replacement, for example, the relationship between rotating hook motion and take-up lever motion should be adjusted as follows:

1) Turn the balance wheel and stop when the take-up lever is lifted to its upper dead point.

2) Lean the machine head backward and make sure the arrow (timing mark) put on the timing belt is in line with the black line on the boss of lower shaft bearing.

3) If the timing mark is not in line with the black line, remove the timing belt and install it again to adjust

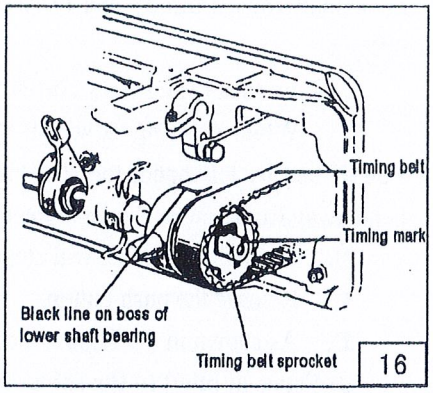

12. Relationship between needle motion and feed dog motion (Fig.17.18.19)

1) Set feed length to "0" on the feed setting dial

2) Lean the machine head backward.

3) Loosen the feed lifting rock shaft crank set Screws **A** and **B**

4) Set the needle at the lowest position.

5) Adjust the distance between presser rod and Vibration prevention rod to 8mm and temporarily tighten the feed lifting rock shaft crank set screws **A** and **B**

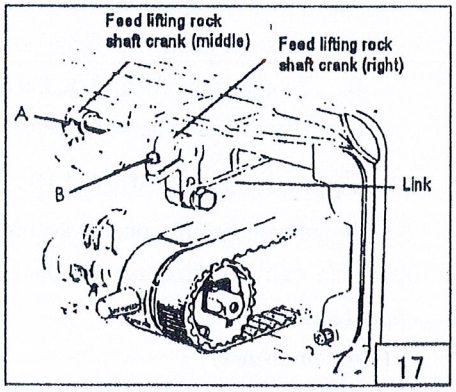

6) Check that the right feed lifting rockshaft crank is connected with the link at right angle, as shown in Figure.

7) If the connection is not at right angle, remove the back cover, loosen screw **C** and move the right link to connect the right feed lifting rockshaft with the link at right angle.

8) After the completion of adjustment, fully tighten the screws **A**. **B** and **C**

At this time make certain that needle can enter the feed dog needle hole at the center of the hole.

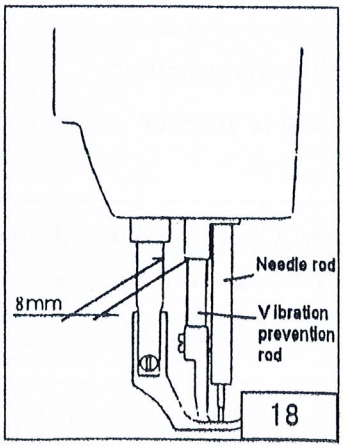

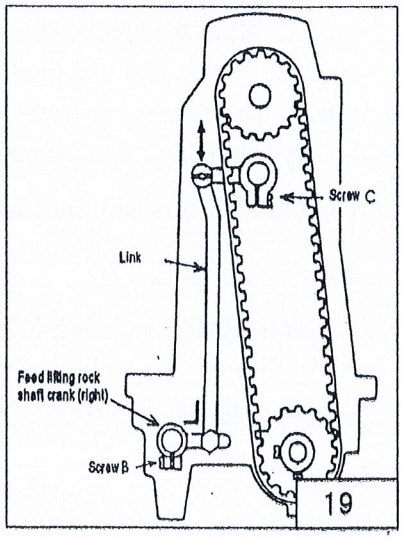

13. Safety clutch device (Fig.20.21)

Safety clutch device is installed to prevent the hook and cog belt from damage in case the thread is caught into the hook when the machine is loaded abnormally during operation.

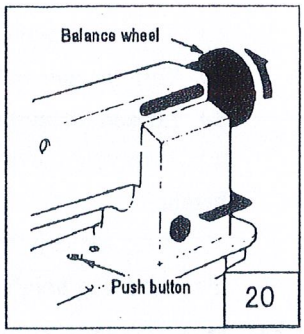

1) Function of safety clutch

A. When the safety clutch acts, the cog belt pulley will be unloaded. Then the rotation of hook shaft will stop. The arm shaft only will rotate. Stop the operation of machine.

B. Clean the thread thoroughly which is caught into the hook.

C. Turn the cog belt hub by hand, and check. Whether the hook shaft rotates lightly and Properly, place the clutch deice as follows.

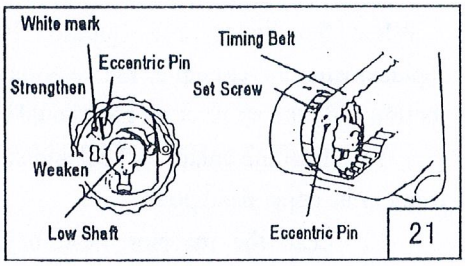

2) How to set the safety clutch

A. While pressing down the push button on the opposite side of bed by left hand, turn the balance wheel slowly by right hand away from you as shown in the figure.

B. The balance wheel will stop by the gear plate, but turn the balance wheel more firmly.

C. Release the push button.

D. As shown in the Figure, the safety clutch device is set.

3) Force applied to the safety clutch

A. The force applied to the safety clutch is the smallest when the white mark of the eccentric pin faces the center of the lower shaft. The force proportionally increases as the white mark faces the outside.

B. To adjust the force slide the timing belt, Loosen the set screw, and turn the eccentric pin.

C. After the adjustment, make sure to fasten the setscrew.

14. Upper feed adjustment (needle side) (Fig.22)

If the uneven feeding occurs according to the fabric, adjust the long hole of the horizontal feed shaft crank (right) to adjust the upper feed length.

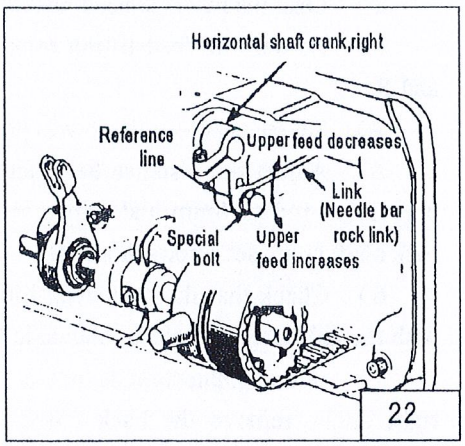

(How to adjust)

1) Loosen the special bolt.

2) Move the special bolt upward to decrease upper feed.

3) Move the special bolt downward to Increase the upper feed. The upper feed and the lower feed theoretically becomes equal at the reference line on the horizontal feed shaft crank.

4) Securely tighten the special bolt after adjustment.

15. Outside presser foot and inside presser vertical stroke adjustment (Fig.23)

When fabric with large elasticity is sewn, Or When thickness of fabric changes, the vertical Stroke (movable range) of the press feet should be adjusted as follows:

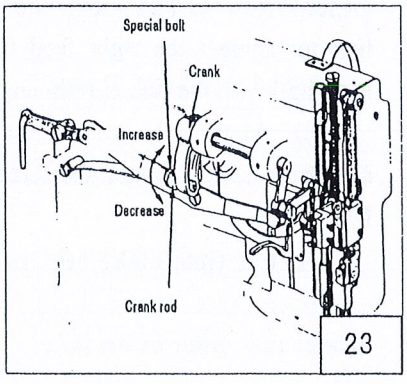

Adjustment

1） Loosen the special bolt.

2） The vertical strokes of the presser feet become maximum when the crank rod is moved upward and set.

3） The vertical strokes become minimum when the nut is moved downward and set.

4) After the adjustment, fully tighten the special bolt.

The vertical strokes of the presser feet can be adjusted within a range from 6mm to 2mm.

16. Adjustment

Screwing the pin that connects the link of back sewing with the crank of back sewing (down) can adjust the tolerance of between the stitches. Screwing the pin in clockwise can increase the stitch of forward sewing; otherwise, the stitch of back sewing will be increased.

17. Installation of Belt cover:

1) Fixed 1 to the arm with screws
2) Fixed 3 to 1 with screws
3) Fixed 4 to 3 and arm with screws

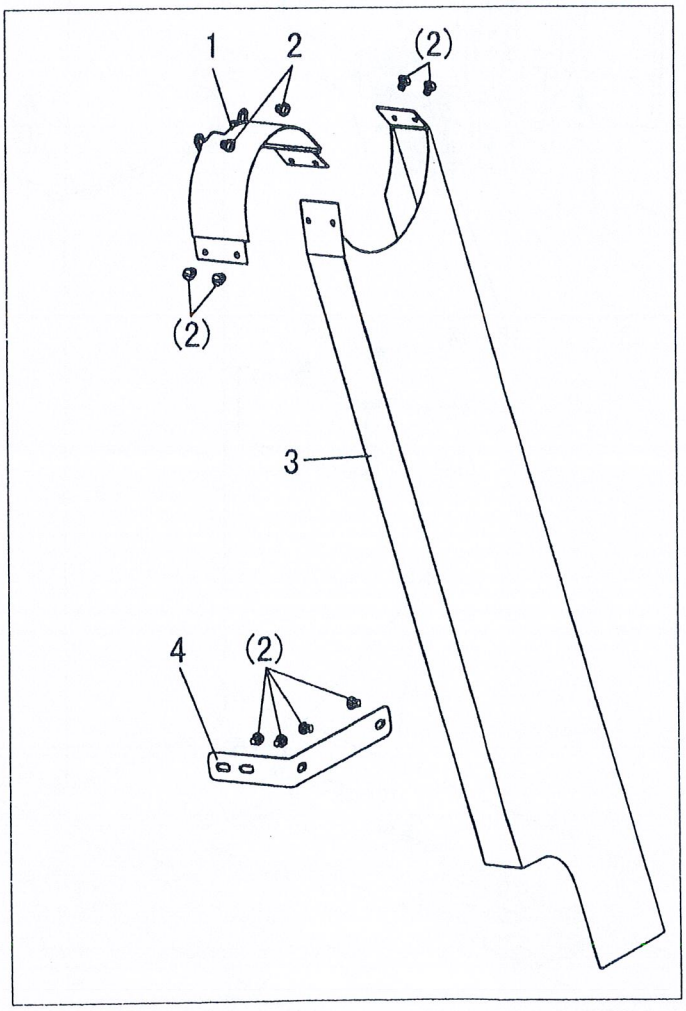

A.ARM BED AND ITS ACCESSORIES

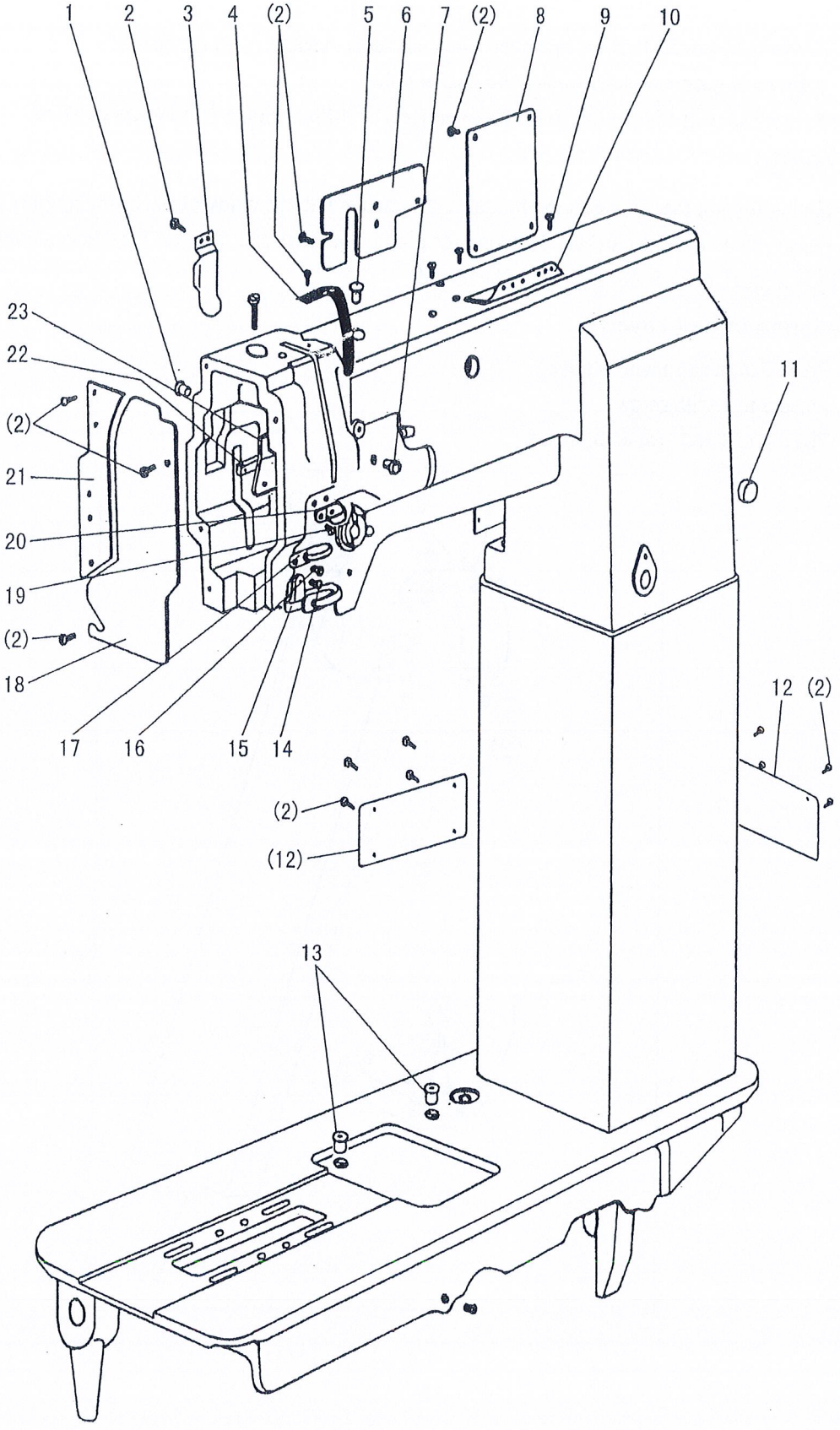

A. ARM BED AND ITS ACCESSORIES

Fig. No.	Part No.	Description	L	R	Remarks
A01	HA300B2090	Rubber plug	2	2	
A02	HA300B2170	Screw	42	42	11/64 (40) ×9
A03	H4716B8001	Oil guide plate	1	1	
A04	H4717B8001	Thread take-up cover	1	1	
A05	H4715B8001	Rubber plug	1	1	
A06	H4718B8001	Arm side cover (left)	1	1	
A07	H2000B2010	Rubber plug	1	1	
A08	H4719B8001	Arm side cover (right)	1	1	
A09	HA700B2060	Screw	2	2	11/64 (40) ×8
A10	H2400B2100	Thread guide	1	1	
A11	HA307B0673	Rubber plug	1	1	
A12	H7117B8001	Arm side cover	2	2	
A13	H2000M0080	Cap	2	2	
A14	H3200B2100	Screw	1	1	9/64 (40) ×6.5
A15	H3212B0066	Thread guide	1	1	
A16	H3000D2160	Screw	1	1	9/64 (40) ×4.5
A17	H4727B8001	Face plate	1	1	
A18	H4726B8001	Thread guide	1	1	
A19	H2400B2080	Screw	2	2	3/16 (28) ×12.1
A20	H2400B2070	Thread guide	1	1	
A21	H4730B8001	Guide mounting plate	1	1	
A22	H2400B2060	Spacer	1	1	
A23	H3200B2060	Oil guide plate	1	1	

B. THREAD TENSION REGULATOR MECHANISM

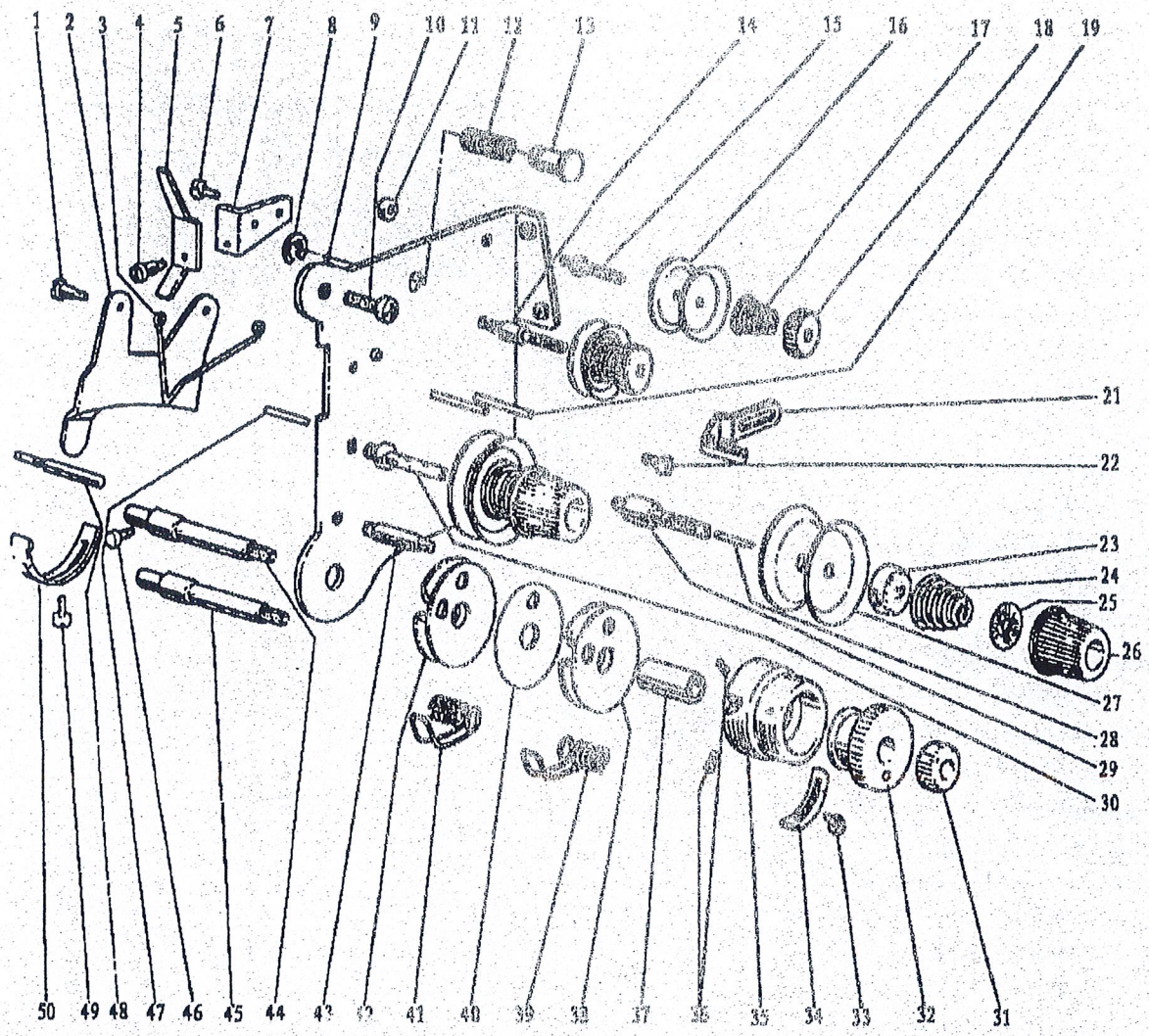

Fig. No.	Part No.	Name					Description
B44	H3248IB121	Thread tension stud		1			
B45	H4805C8001	Thread tension stud					
B46	H3230K0751	Screw		1			SM11/64 (40) ×10
B47	H3221B6817	Pin		1			
B48	H3221B6818	Tension releasing pin		1			
B48	H4916B8001	Tension releasing pin					
B49	H3200B2100	Screw		1			SM9/64 (40) ×6.5
B50	H3221B6819	Stopper		1			

B.THREAD TENSION REGULATOR MECHANISM

Fig. No.	Part No.	Name					Description
B01	H3221B6811	Screw		2			SM9/64 (40) ×3
B02	H3221B3142	Tension releasing plate		1			
B03	H3221B6812	Tension releasing spring		1			
B04	H4705C8001	Screw		1			SM9/64 (40) ×4.2
B05	H4706C8001	Lever		1			
B06	HA7311C306	Screw		1			SM9/64 (40) ×4.5
B07	H4707C8001	Mounting plate		1			
B08	H007013050	Stop ring		1			GB/T896 5
B09	H3221B6820	Mounting plate		1			
B10	HA300C2030	Screw		2			
B11	H3221B6810	Nut		1			SM11/64 (40)
B12	H4708C8001	Spring		1			
B13	H4709C8001	Push button		1			
B14	H3221B0685	Thread tension stud		1			
B15	H3221B0683	Thread tension stud		1			
B16	HA112B0693	Thread tension disk		4			
B17	H3221B0684	Thread tension spring		2			
B18	HA710B0671	Thumb nut		2			
B19	H3221B0682	Pin		3			
B21	H3306B0661	Thread guide		1			
B22	HA106B0676	Screw		1			SM9/64 (40) ×6
B23	HA310B0702	Thread tension releasing plate		2			
B24	H4710C8001	Thread tension spring		2			
B25	HA115B7010	Thumb nut revolution stopper		2			
B26	HA310B0701	Thumb nut complete		2			
B27	HA310B0705	Thread tension disk		4			
B28	H3221B6816	Pin		1			
B29	H3221B0689	Thread tension stud		1			
B30	H3221B0686	Thread tension stud		1			
B31	H32481B721	Thumb nut		1			SM1/4 (40)
B32	H32481B621	Take-up spring guide		1			
B33	H32481BC21	Screw		1			SM9/64 (40) ×6
B34	H32481BB21	Stopper		1			
B35	H32481B921	Thread tension post		1			
B36	H32481B521	Screw		2			SM1/8 (44) ×3.9
B37	H32481B821	Bushing		1			
B38	H32481BF21	Plate complete		1			
B39	H4712C8001	Thread take-up spring		1			
B40	H32481BE21	Plate		1			
B41	H4713C8001	Thread take-up spring		1			
B42	H32481BD21	Plate complete		1			
B43	H4804C8001	Screw					
B43	H32481B421	Thread tension stud		1			SM9/64 (40) ×2.9

C. ARM SHAFT MECHANISM

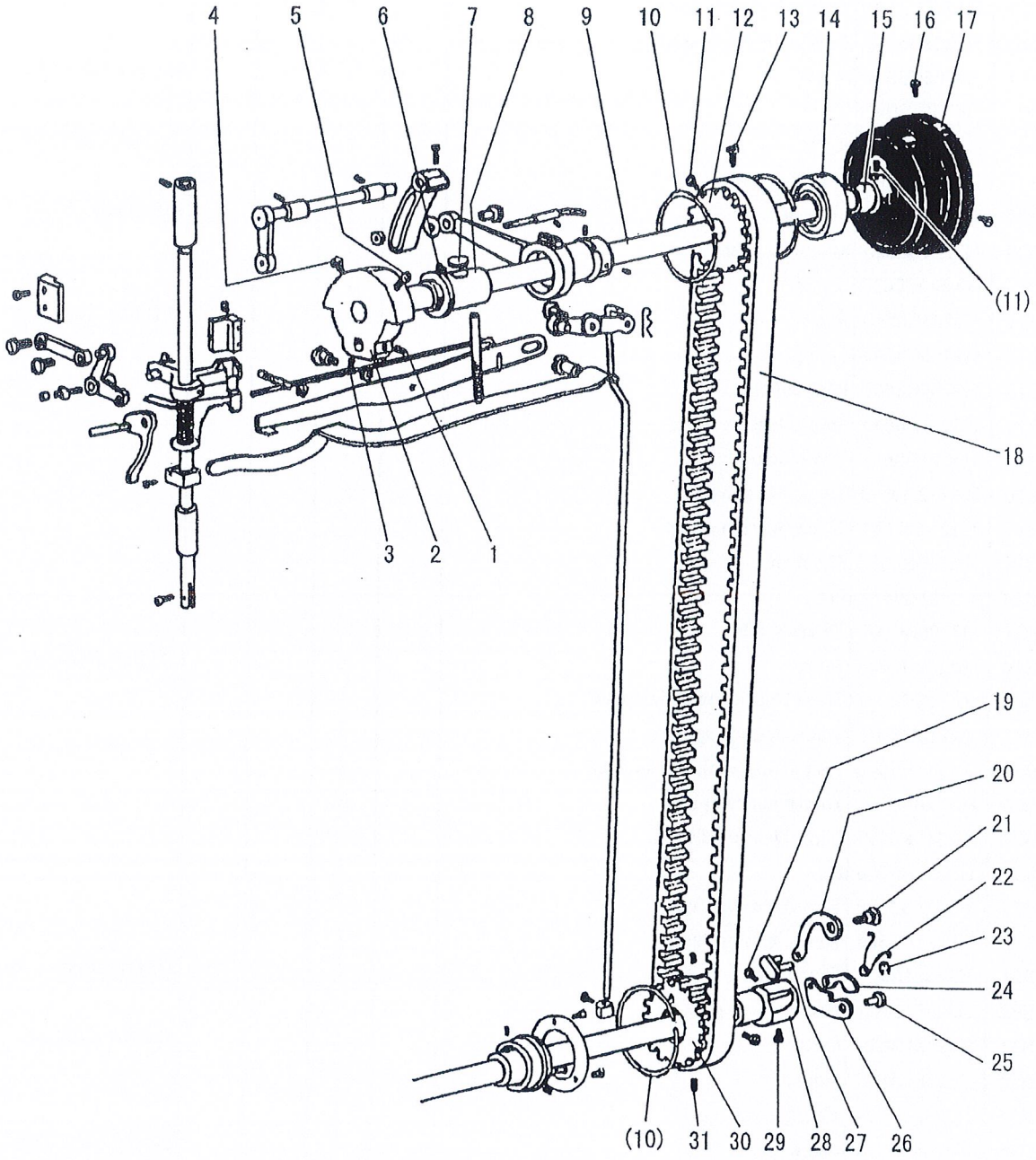

C.ARM SHAFT MECHANISM

Fig. No.	Part No.	Description	L	R	Remarks
C01	HA307C0662	Set screw	1	1	1/4 (40) ×6
C02	H4706D8001	Crank	1	1	
C03	HA105D0662	Set screw	1	1	1/4 (40) ×4
C04	HA100C2060	Screw	1	1	9/32 (28) ×13
C05	HA100C2070	Screw	1	1	9/32 (28) ×14
C06	H4708D8001	Set screw	1	1	1/4(24)×13
C07	H32111B104	Felt	1	1	
C08	H32111B204	Arm shaft bushing (left)	1	1	
C09	H4709D8001	Arm shaft	1	1	
C10	H3205C0661	Spring flange	3	3	
C11	HA113F0684	Screw	3	3	15/64 (28) ×8.5
C12	H3205C1021	Pulley	1	1	
C13	HA100F2130	Screw	1	1	15/64 (28) ×14.5
C14	H3205J0662	Bearing	1	1	
C15	H3205J0661	Collar	1	1	
C16	HA110D0672	Screw	2	2	15/64 (28) ×12
C17	H4100C2040	Pulley	1	1	
C18	H7104D8001	Cog belt	1	1	
C19	HA104F0654	Screw	1	1	15/64 (28) ×10
C20	H4713D8001	Link	1	1	
C21	H4714D8001	Pin	1	1	
C22	H4716D8001	Spring	1	1	
C23	H007013025	E-type ring	1	1	GB/T896 2.5
C24	H4717D8001	Link	1	1	
C25	H4718D8001	Pin	1	1	
C26	H4719D8001	Link	1	1	
C27	H4715D8001	Pin	1	1	
C28	H4720D8001	Bushing	1	1	
C29	H4721D8001	Screw	1	1	15/64(28)×10.5
C30	H4722D8001	Pulley	1	1	
C31	H4723D8001	Screw	2	2	15/64(28)×4.5

D. UPPER SHAFT & PRESSER FOOT MECHANISM

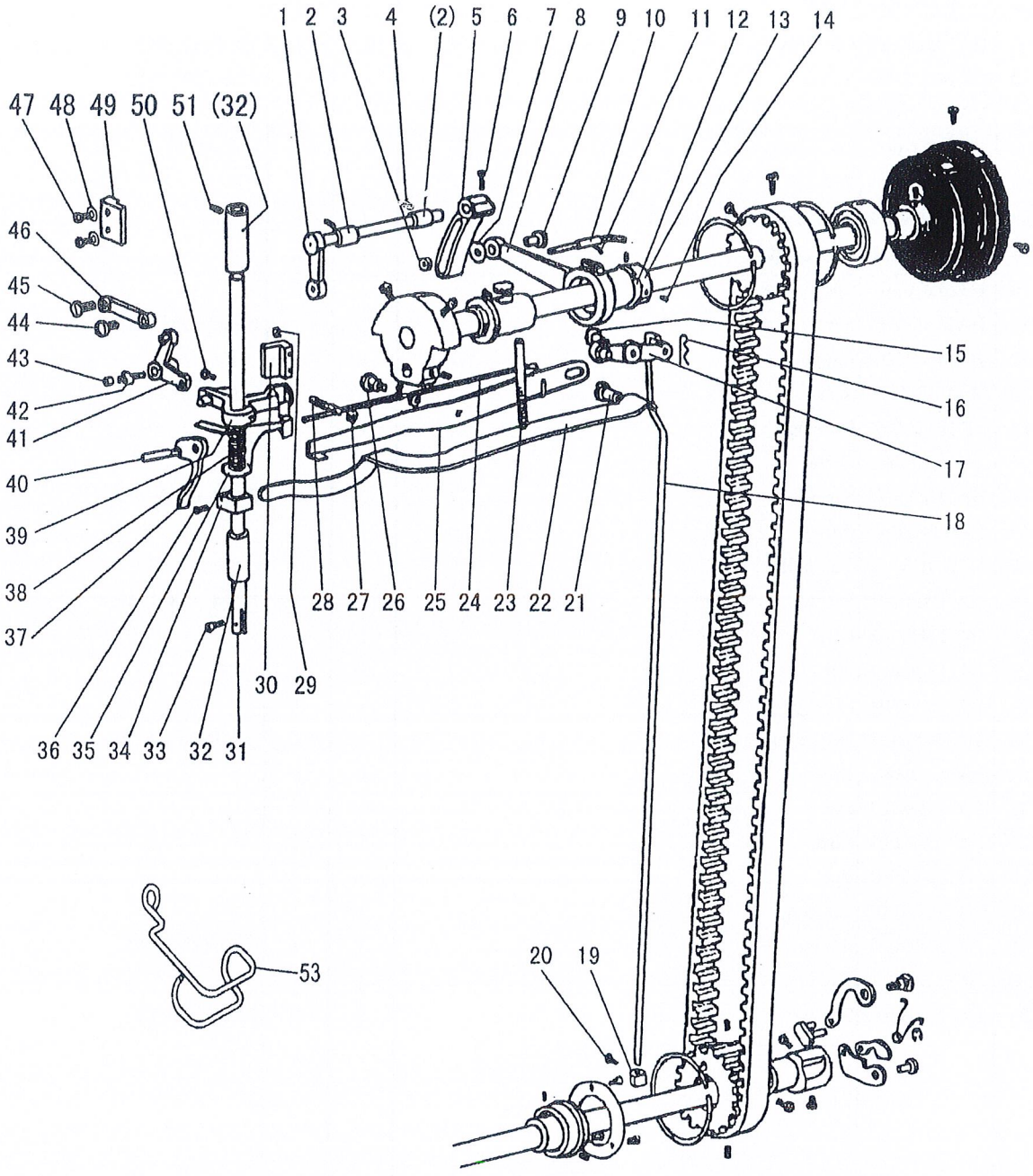

D.UPPER SHAFT & PRESSER FOOT MECHANISM

Fig. No.	Part No.	Description	L	R	Remarks
D01	H4705E8001	Feed lifting rock shaft	1	1	
D02	H4707E8001	Bushing	2	2	
D03	H003055060	Nut	1	1	(M6×0.75)
D04	H4706E8001	Set screw	2	2	1/4 (24)×7
D05	H4709E8001	Crank	1	1	
D06	H3115F0671	Screw	1	1	1/4 (28) ×16
D07	H2013J0065	Washer	1	1	
D08	H2014J0066	Connecting rod	1	1	
D09	H2000J2100	Screw	1	1	
D10	H4713E8001	Oil wick	1	1	
D11	H20111C106	Holder	1	1	
D12	H007009250	C-type ring	1	1	GB/T894.1 25
D13	H4714E8001	Eccentric	1	1	
D14	HA307C0662	Screw	2	2	1/4 (40) ×6
D15	H4732E8001	Screw	1	1	1/4 (24) ×14
D16	H4739E8001	Snap pin	1	1	
D17	H4734E7101	Knee lifter lifting lever	1	1	
D18	H7104E8001	Operation rod	1	1	
D19	H4741E8001	Collar	1	1	
D20	H4742E8001	Screw	1	1	11/64 (40) ×5.5
D21	H3100G2170	Screw	1	1	1/4 (24) ×17
D22	H4730E8001	Lever spring	1	1	
D23	H4729E8001	Screw	1	1	15/64 (28) ×79
D24	H4727E8001	Twist spring	1	1	
D25	H4728E8001	Knee lifting lever	1	1	
D26	H3100G2130	Screw	1	1	1/4 (24) ×7
D27	H4726E8001	Nut	1	1	
D28	H4725E8001	Screw	1	1	1/4 (24) ×19
D29	HA111G0683	Screw	2	2	11/64(40)×12
D30	H4723E8001	Guide	1	1	
D31	H4754E8001	Presser bar	1	1	
D32	H4744E8001	Bushing	1	1	
D33	H3200E2020	Screw	1	1	1/8(44)×9
D34	H4746E8001	Spring bracket	1	1	
D35	H4768E8001	Thread releasing plate	1	1	
D36	H2404I0034	Screw	1	1	9/64 (40) ×8.5
D37	H4748E8001	Lift lever	1	1	
D38	H4767E8001	Spring	1	1	
D39	H4752E8001	Bracket	1	1	
D40	H4749E8001	Screw	1	1	11/64 (40) ×8.5
D41	H4715E8001	Bell crank	1	1	
D42	H2004J0655	Screw	1	1	3/16 (28) ×10
D43	H4717E8001	Roller	1	1	

D.UPPER SHAFT & PRESSER FOOT MECHANISM

Fig. No.	Part No.	Description	L	R	Remarks
D44	H4718E8001	Screw	1	1	11/64(32)×6
D45	H2004J0662	Screw	1	1	1/4(40)×5
D46	H4719E8001	Link	1	1	
D47	HA100E2150	Screw	2	2	11/64 (40) ×10
D48	H4722E8001	Washer	2	2	
D49	H4721E8001	Bell crank guide	1	1	
D50	H4753E8001	Screw	1	1	11/64 (40) ×17.5
D51	H4708D8001	Set screw	2	2	1/4(24)×13
D53	HE204I8001	Finger gusrd	1	1	

E. TAKE-UP THREAD AND ARM SHAFT MECHANISM

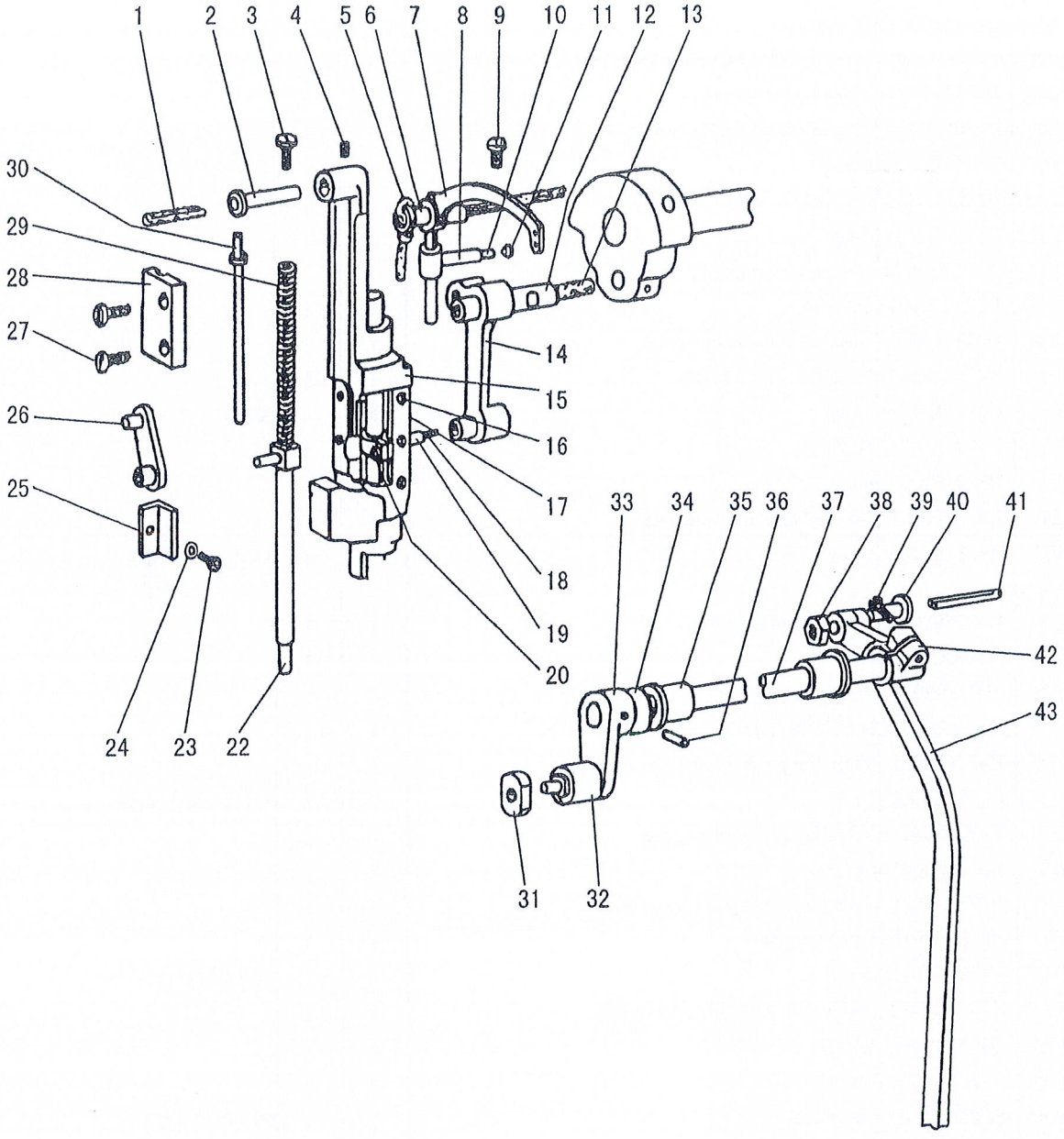

E.TAKE-UP THREAD AND ARM SHAFT MECHANISM

Fig. No.	Part No.	Description	L	R	Remarks
E01	H24211DN05	Oil wick	1	1	
E02	H4706F8001	Needle bar guide bracket stud	1	1	
E03	H4707F8001	Screw	1	1	5/16 (28) ×10.4
E04	HA100C2020	Set screw	1	1	15/64 (28) ×10
E05	H24211DN05	Oil wick	1	1	
E06	H24211DM05	Thread take-up lever support stud	1	1	
E07	H4712F8001	Thread take-up lever	1	1	
E08	H2405D1112	Thread take-up slide brock	1	1	
E09	HA110D0672	Screw	1	1	15/64 (28) ×12
E10	H24211D405	Oil wick	1	1	
E11	H24211D305	Plug	1	1	
E12	H2405D0662	Needle bar crank pin	1	1	
E13	H4716F8001	Oil wick	1	1	
E14	H4717F8001	Needle bar connecting link	1	1	
E15	H4719F8001	Needle bar rock frame	1	1	
E16	H32111D304	Screw	6	6	3/32 (56) ×4
E17	H4721F8001	Washer	2	2	
E18	H3204D6513	Felt	1	1	
E19	H4722F8001	Needle bar connecting stud	1	1	
E20	H32111D604	Screw	1	1	9/64 (40) ×8.5
E22	H4725F8001	Vibrating presser bar	1	1	
E23	H3400C2020	Bolt	1	1	
E24	H3200I2030	Washer	1	1	
E25	H3400C2010	Needle bar guide	1	1	
E26	H4726F8001	Vibrating presser bar link	1	1	
E27	H4753E8001	Screw	2	2	11/64 (40) ×17.5
E28	H4728F8001	Vibrating presser bar guide	1	1	
E29	H4729F8001	Spring	1	1	
E30	H4730F8001	Vibrating presser spring guide	1	1	
E31	H3410C301P	Square block	1	1	
E32	H3406C0671	Screw	1	1	15/64(28)×10
E33	H3406C0672	Needle bar vibrating crank(left)	1	1	
E34	H4734F8001	Washer	1	1	
E35	H3204B0652	Bushing	2	2	
E36	H602040240	Taper pin	1	1	GB/T117 4×24
E37	H4736F8001	Needle bar vibrating shaft	1	1	
E38	H7107F8001	Nut	1	1	
E39	H2012N0652	Screw	1	1	1/4 (24) ×16
E40	H7108F8001	Screw	1	1	5/16 (24) ×5
E41	H32311D406	Oil wick	1	1	
E42	H7104F8001	Needle bar vibrating crank(right)	1	1	
E43	H7105F8001	Connecting link	1	1	

F. STITCH REGULATOR MECHANISM

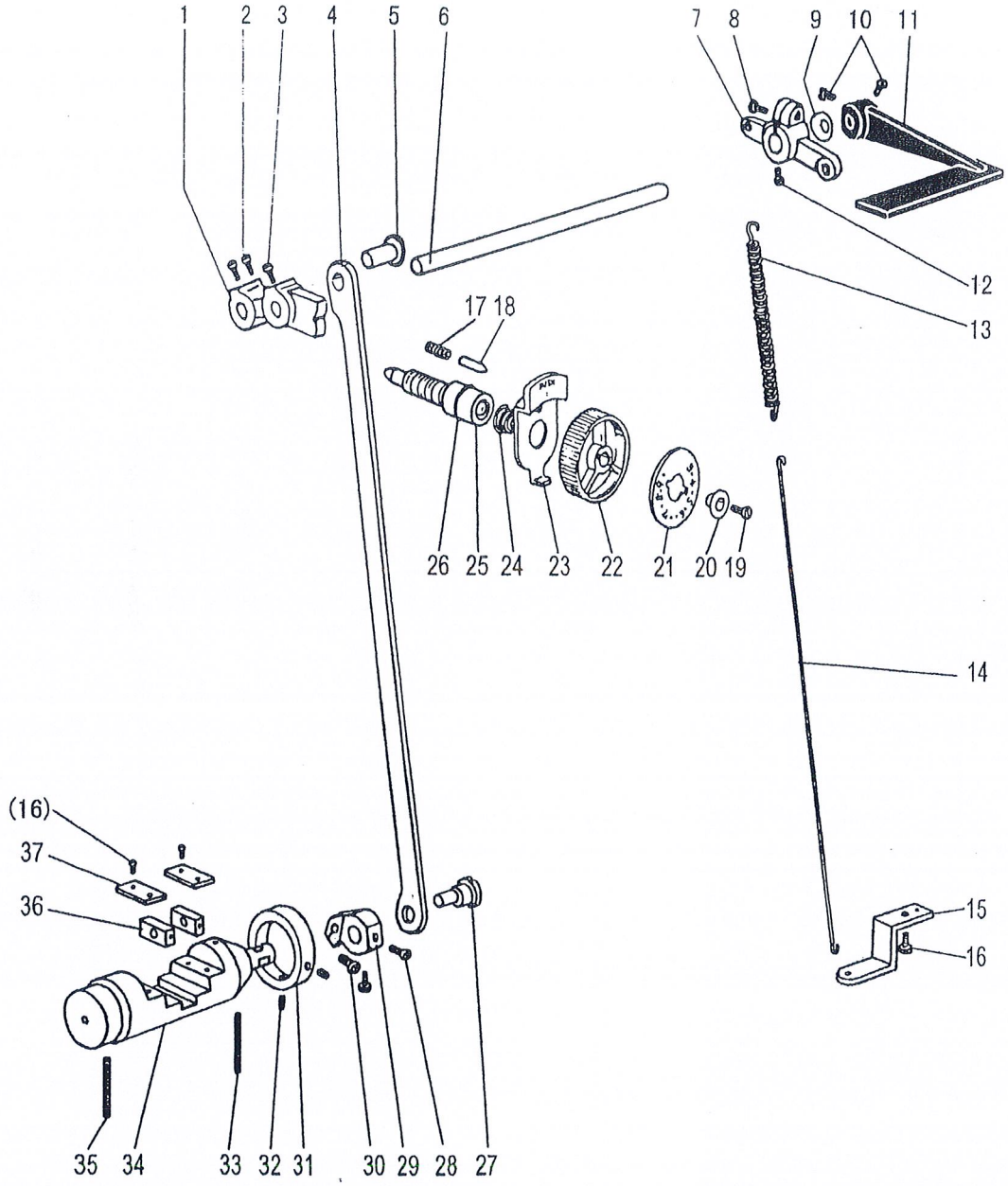

F.STITCH REGULATOR MECHANISM

Fig. No.	Part No.	Description	L	R	Remarks
F01	H4706G8001	Feed regulator	1	1	
F02	HA113F0684	Screw	2	2	15/64 (28) ×8.5
F03	H3200F2020	Screw	1	1	15/64 (28) ×12
F04	H7104G8001	Link	1	1	
F05	HA100G2070	Eccentric shaft	1	1	
F06	H4709G8001	Reverse stitch shaft	1	1	
F07	H3207F0671	Reverse stitch crank	1	1	
F08	HA800F2020	Screw	1	1	15/64 (28) ×13.5
F09	HA100F2110	Washer	1	1	
F10	HA113F0684	Screw	2	2	15/64 (28) ×8.5
F11	H4711G8001	Feed reversing lever	1	1	
F12	H3207F0672	Screw	1	1	11/64 (40) ×8.5
F13	H4710G8001	Spring	1	1	
F14	H7105G8001	Spring hook	1	1	
F15	H3200F2050	Bracket for spring	1	1	
F16	HA300C2030	Screw	5	5	11/64 (40) ×8
F17	H3200F2110	Spring	1	1	
F18	HA100F2080	Stopper pin	1	1	
F19	HA720F0686	Screw	1	1	3/16(28)×18
F20	HA720F0685	Bushing	1	1	
F21	H7107G8001	Stitch length indicating plate	1	1	
F22	HA7421F120	Dial	1	1	
F23	HA720F0683	Stopper pin releasing	1	1	
F24	HA720F0687	Spring	1	1	
F25	HA109F0671	Screw bar	1	1	
F26	HA109F0674	O-ring	1	1	
F27	H3206F0662	Pin	1	1	
F28	H415050060	Screw	1	1	M5×6
F29	H7109G8001	Reverse stitch shaft crank	1	1	
F30	H428050200	Screw	2	2	M5×20
F31	H4716G8001	Coolar	1	1	
F32	HA3411D308	Screw	2	2	15/64(28)×7
F33	H4719G8001	Felt	1	1	
F34	H4720G8001	Reverse bar	1	1	
F35	H4721G8001	Felt	1	1	
F36	H4722G8001	Square block	2	2	
F37	H4723G8001	Guide plate	2	2	

G. LOWER SHAFT & FEED ROCK SHAFT MECHANISM

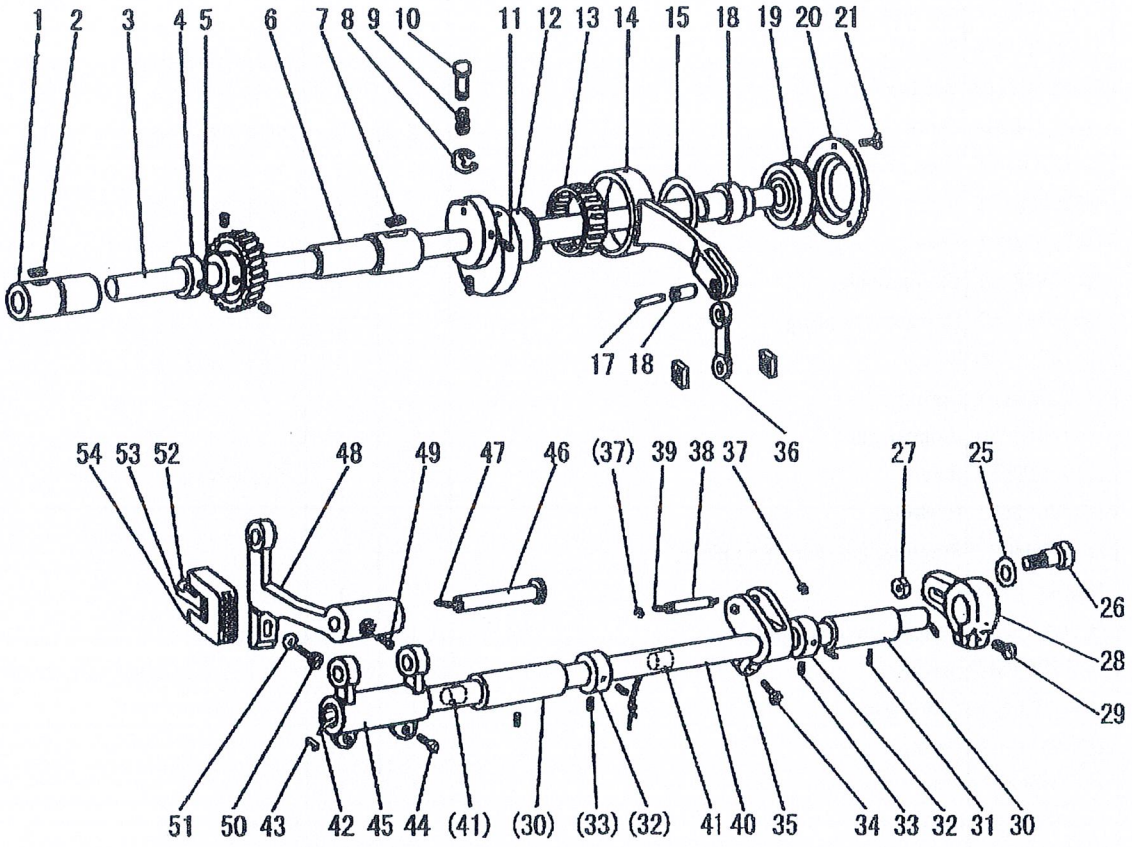

G.LOWER SHAFT & FEED ROCK SHAFT MECHANISM

Fig. No.	Part No.	Description	L	R	Remarks
G01	H4706H8001	Lower shaft bushing(left)	1	1	
G02	H4707H8001	Oil wick	1	1	
G03	H7107H8001	Lower shaft	1	1	
G04	H4710H8001	Feed lifting cam	1	1	
G05	H3205H0654	Set screw	1	1	1/4(40)×5
G06	H4712H8001	Lower shaft bushing(right)	1	1	
G07	H4713H8001	Oil wick	1	1	
G08	H007013050	Stop ring	2	2	GB/T896 5
G09	H4714H8001	Spring	1	1	
G10	H4715H8001	Push button	1	1	
G11	H2405D0664	Screw	2	2	15/64(28)×14
G12	H4717H8001	Feed eccentric	1	1	
G13	H4718H8001	Feed connecting rod	1	1	
G14	H4719H8001	Needle bearing	1	1	
G15	H007009260	C-type stop ring	1	1	GB/T894.1 26
G16	H4720H8001	Oil wick	1	1	
G17	H4721H8001	Shaft	1	1	
G18	H4722H7101	Lower shaft bushing complete(middle)	1	1	
G19	H3904B0656	Ball bearing	1	1	
G20	H4727H8001	Bearing holder	1	1	
G21	HA7311C306	Screw	3	3	9/64 (40) ×7
G25	H4728H8001	Washer	1	1	
G26	H4729H8001	Screw	1	1	M6(0.75)×24
G27	H003055060	Nut	1	1	M6×0.75
G28	H7105H8001	Feed connection crank (right)	1	1	
G29	H2012N0652	Screw	1	1	1/4 (24) ×16
G30	HA100G2120	Feed rock shaft bushing	2	2	
G31	H4708D8001	Screw	2	2	1/4(24)×13
G32	HA108G0661	Collar	2	2	
G33	HA105D0662	Screw	4	4	1/4 (40) ×4
G34	H2012N0652	Screw	1	1	1/4 (24) ×16
G35	H4736H8001	Feed connection crank (middle)	1	1	
G36	H4737H8001	Link	1	1	
G37	H007013050	E-type stop ring	2	2	GB/T896 5
G38	H4738H8001	Pin	1	1	
G39	H4739H8001	Oil wick	1	1	
G40	H3204G0651	Feed rock shaft	1	1	
G41	H4740H8001	Felt	2	2	
G42	H3204G0031	Oil wick	1	1	
G43	H3200G2030	Clip	1	1	
G44	HA104G1012	Screw	2	2	3/16(28)×12
G45	H3205G1032	Feed connection crank (left)	1	1	
G46	H32243G205	Feed bar shaft	1	1	

G.LOWER SHAFT & FEED ROCK SHAFT MECHANISM

Fig. No.	Part No.	Description	L	R	Remarks
G47	H3205G0662	Oil wick	1	1	
G48	H7106H8001	Feed bar	1	1	
G49	H429050050	Screw	1	1	
G50	H3200H2040	Screw	1	1	15/64(28)×20.5
G51	H2013J0065	Washer	1	1	
G52	H3205H0653	Screw	1	1	1/8(44)×4
G53	H3205H0652	Felt	1	1	
G54	H4743H8001	Feed bar forked connection	1	1	

H. FEED BAR MECHANISM

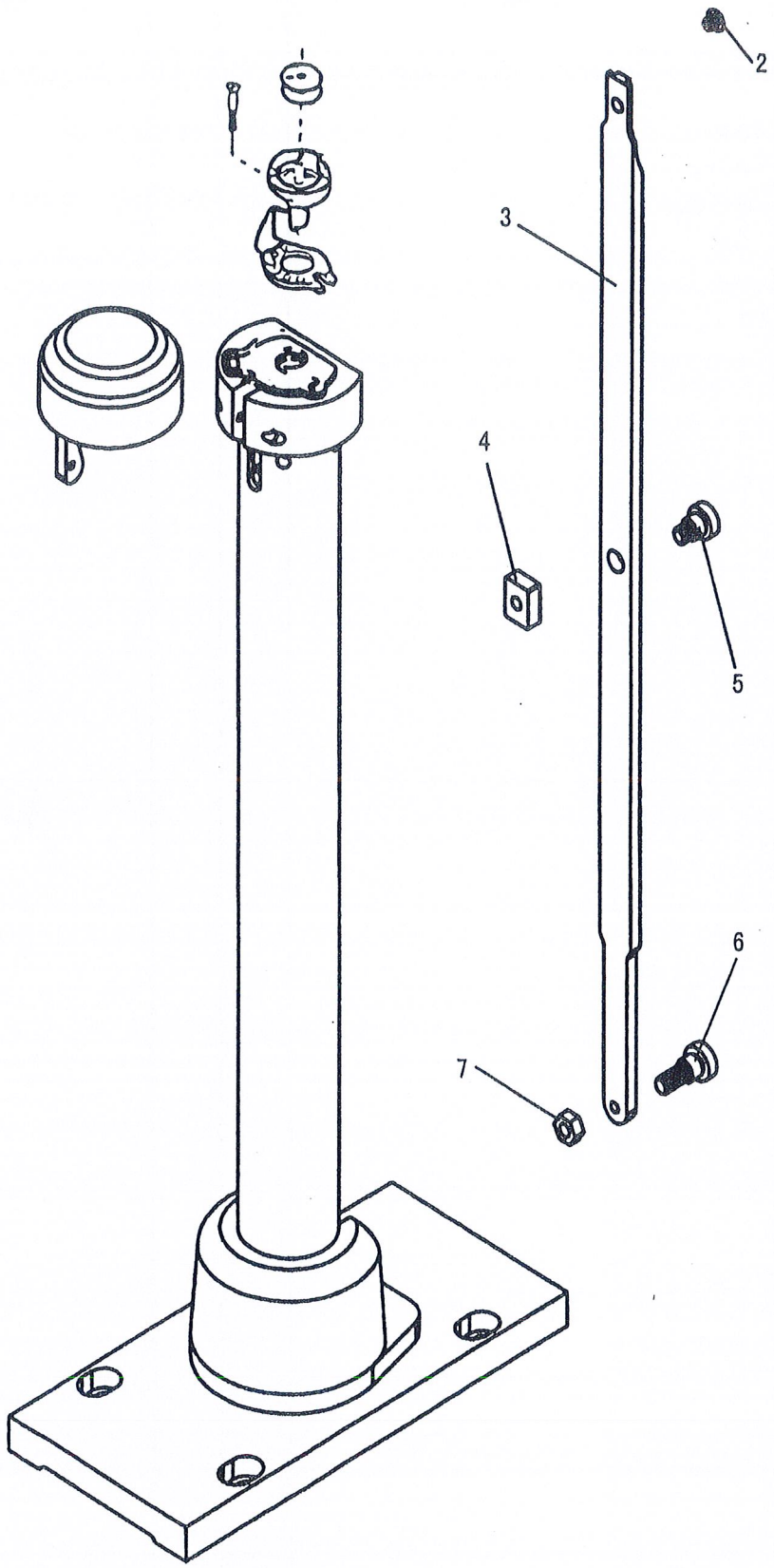

H.FEED BAR MECHANISM

Fig. No.	Part No.	Description	L	R	Remarks
H02	H7108I8001	Screw	1	1	
H03	H7104I8001	Feed bar	1	1	
H04	H7105I8001	Square block	1	1	
H05	H7106I8001	Screw	1	1	
H06	H7113I8001	Screw	1	1	
H07	H3208G0675	Nut	1	1	

I. HOOK SADDLE MECHANISM

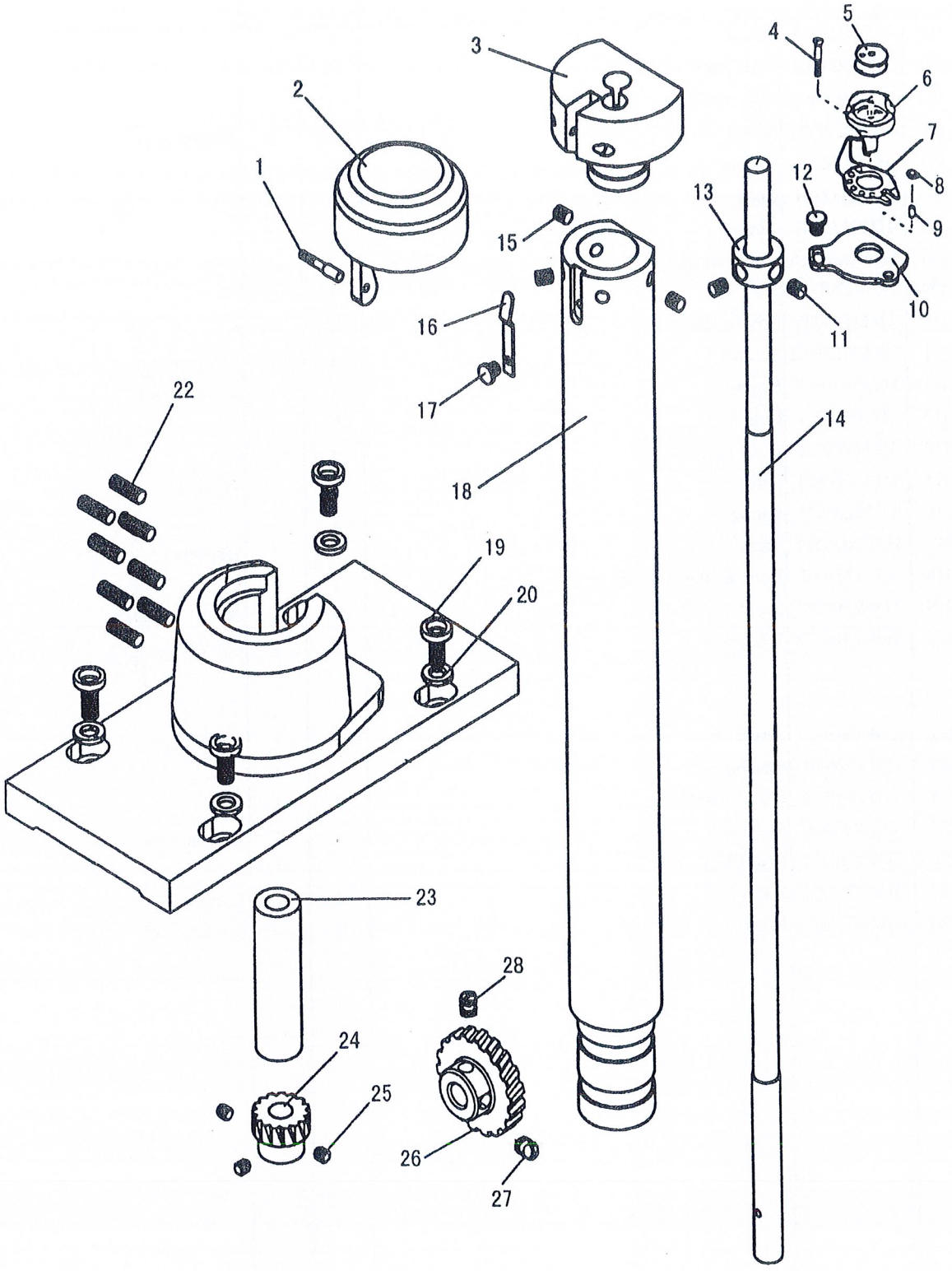

I.HOOK SADDLE MECHANISM

Fig. No.	Part No.	Description	L	R	Remarks
I01	H7124J8001	Screw	1	1	
I02	H7123J8001	Slide plate	1	1	
I03	H7109J8001	Hook saddle	1	1	
I04	H5337D8001	Screw	3	3	9/64(36)×30
I05	H2400I2020	Bobbin	1	1	
I06	H7127J7101	Hook	1	1	
I07	H7125J8001	Opener	1	1	
I08	H41622D216	Square block	4	4	
I09	H410270D16	Pin	1	1	
I10	H7115J8001	Cover plate	1	1	
I11	HA105D0662	Screw	1	1	1/4 (40) ×4
I12	H2204C0651	Screw	1	1	9/64(40)×6.5
I13	H7106J8001	Collar	1	1	
I14	H7104J8002	Hook shaft	1	1	
I15	H3210F0681	Screw	1	1	M5×6
I16	H7122J8001	Spring	1	1	
I17	H3204D6511	Screw	1	1	1/8(44)×3.5
I18	H7113J8001	Hook saddle post bed	1	1	
I19	H415080200	Screw	4	4	GB/T70.1 M8×20
I20	H005004080	Washer	4	4	GB/T848 8
I22	H2000H2020	Screw	1	1	15/64(28)×14
I23	H7121J8001	Bushing	1	1	
I24	H4705I8001	Gear (small)	1	1	
I25	HA105D0662	Screw	3	3	1/4 (40) ×4
I26	H4706I8001	Gear (Big)	1	1	
I27	H4707I8001	Screw	1	1	1/4(40)×6.5
I28	HA307C0662	Screw	1	1	1/4 (40) ×6

J. OIL LUBRICATION MECHANISM

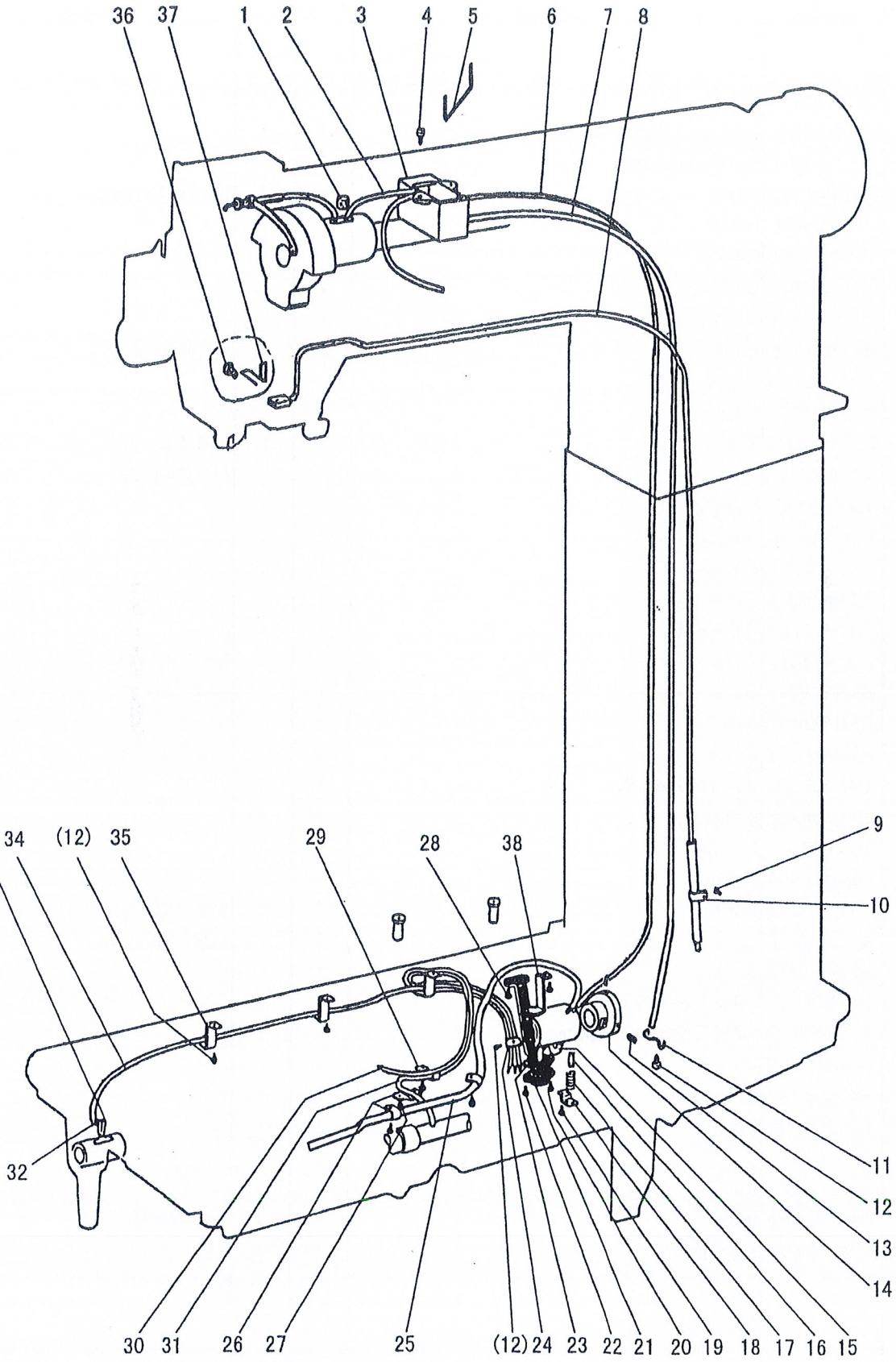

J.OIL LUBRICATION MECHANISM

Fig. No.	Part No.	Description	L	R	Remarks
J01	H4731J8001	Holder	1	1	
J02	H4705J7101	Oil pipe & wick complete	1	1	
J03	H3204K0011	Oil tank complete	1	1	
J04	H411040160	Screw	2	2	GB/T819.1 M4×16
J05	H4707J8001	Holder	1	1	
J06	H7109K8001	Oil pipe	1	1	
J07	H7110K8001	Oil pipe	1	1	
J08	H7111K7101	Oil pipe complete	1	1	
J09	HA7311CC06	Screw	1	1	9/64(40)×6.5
J10	H2000M0110	Holder	1	1	
J11	H4714J8001	Holder	1	1	
J12	HA106B0676	Screw	8	8	9/64 (40) ×6
J13	H3230K0751	Set screw	2	2	11/64(40)×10
J14	H4716J8001	Bushing	1	1	
J15	H3215K0696	Oil pipe	1	1	
J16	H1100I2070	Plunger	1	1	
J17	H1100I2090	Coil spring	1	1	
J18	H1100I2110	Guide plate	1	1	
J19	H3204D6510	Screw	1	1	1/8 (44) ×4.8
J20	H3215K0693	Screw	1	1	9/64 (40) ×5
J21	H3215K0692	Filter	1	1	
J22	H3215K0694	Screw	4	4	9/64 (40) ×7
J23	H4718J7101	Base plate complete	1	1	
J24	H4720J8001	Holder	1	1	
J25	H4805J8001	Oil pipe	1	1	
J26	H2000M0110	Holder	3	3	
J27	HA106B0676	Screw	1	1	9/64 (40) ×6
J28	HA100E2150	Screw	2	2	11/64 (40) ×10
J29	H3200K0170	Holder	1	1	
J30	H4728J7101	Oil pipe & wick complete	1	1	
J31	H3216K0070	Oil pipe & wick complete	1	1	
J32	H3216K0701	Oil wick	1	1	
J33	H3200K0180	Oil wick	1	1	
J34	H4726J8001	Oil pipe	1	1	
J35	H3200K0160	Holder	3	3	
J36	H4731J8001	Holder	1	1	
J37	HA100C2040	Screw	1	1	11/64(40)×5.5
J38	H4722J8001	Supporter	1	1	

K. ACCESSORIES (I)

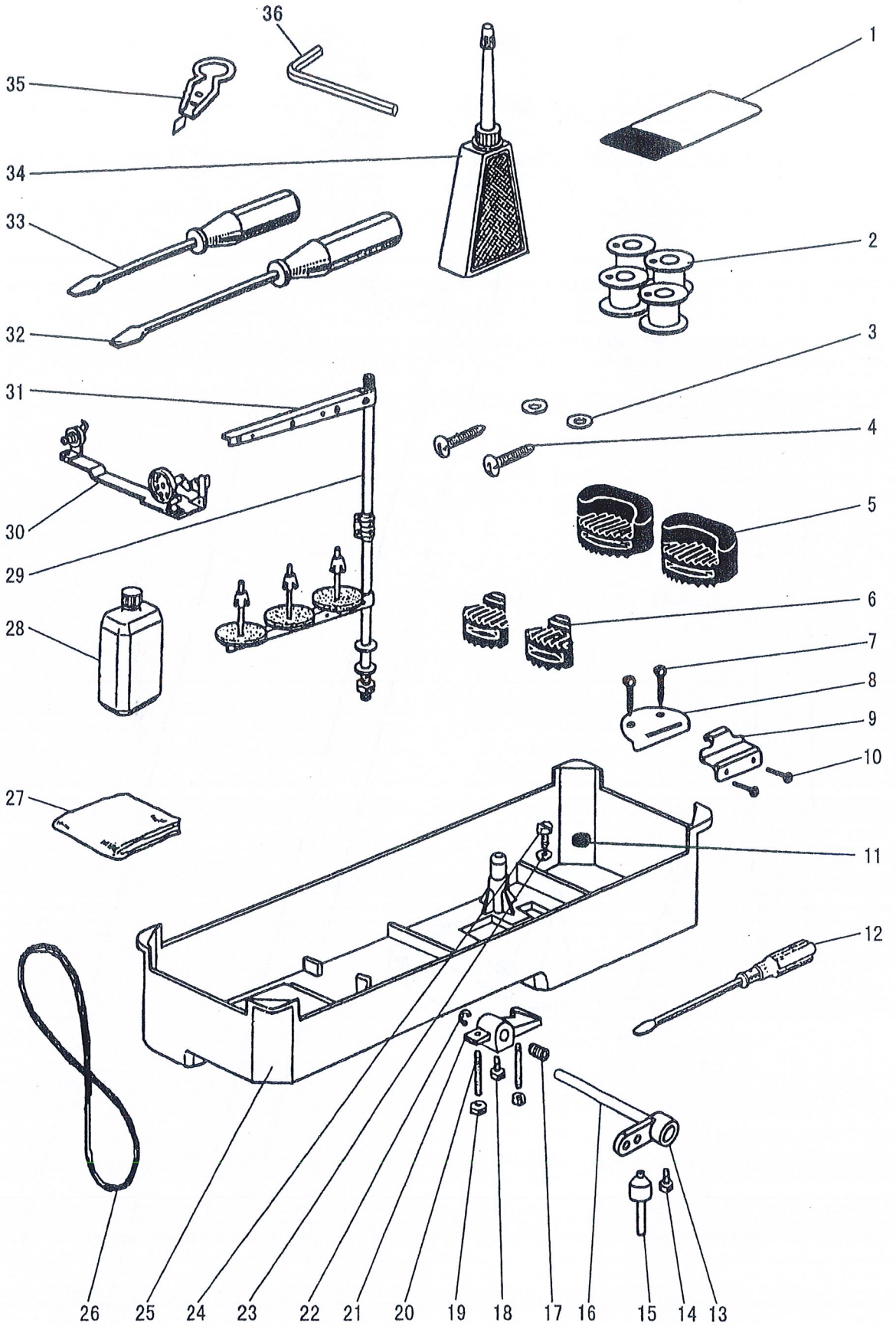

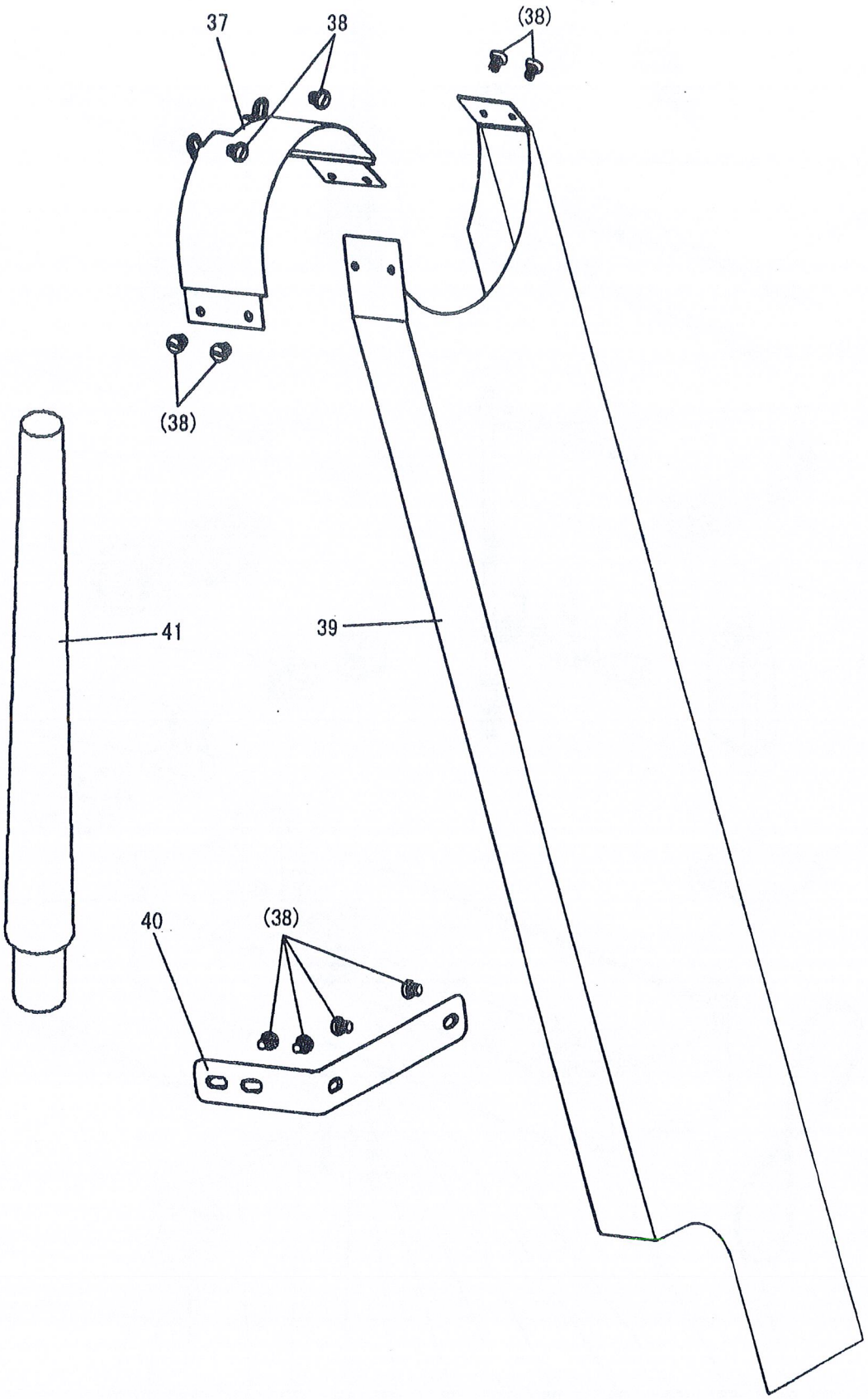
37
38
(38)
(38)
41
39
40
(38)

K.ACCESSORIES (I)

Fig. No.	Part No.	Description	L	R	Remarks
K01	H4705K8001	Needle	3	3	DP×17 23#
K02	H2400I2020	Bobbin	2	2	
K03	HA300J2230	Washer	4	4	
K04	H801045200	Wood screw	4	4	GB/T99 4.5×20
K05	H3200L0020	Vibration preventing rubber	2	2	
K06	H3200L0030	Vibration preventing rubber	2	2	
K07	H802060250	Screw	4	4	GB/T100 6×25
K08	H2404K0654	Hinge(1)	2	2	
K09	H2404K0655	Hinge(2)	2	2	
K10	H2404K0656	Screw	4	4	
K11	HA100J2120	Magnet	1	1	
K12	HA300J2070	Screw driver (larger)	1	1	
K13	H7122L8001	Crank	1	1	
K14	HA106J0664	Screw	1	1	15/64(18)×13
K15	H3214L2011	Knee lifter pin	1	1	
K16	H3213L0662	Knee lifter shaft	1	1	
K17	HA104J0657	Spring	1	1	
K18	HA106J0664	Screw	1	1	15/64（18）×13
K19	HA104J6510	Nut	2	2	
K20	HA104J0659	Screw	2	2	15/64（28）×28
K21	H3213L0664	Knee lifter crank	1	1	
K22	H007013090	E-type ring	1	1	GB/T896 9
K23	HA104J0653	Washer	1	1	
K24	HA104J0652	Screw	1	1	5/16（28）×10
K25	H3213L0661	Oil reservoir	1	1	
K26	H7116L8001	M-type belt	1	1	
K27	H7114L8001	Vinyl cover	1	1	
K28	H3200L0130	Oil tank	1	1	
K29	H7112L8001	Cotton stand pipe	1	1	
K30	HA706S0067	Bobbin winder	1	1	
K31	H3200L0120	Cotton stand	1	1	
K32	HA100J2140	Screw driver(middle)	1	1	
K33	HA100J2150	Screw driver (small)	1	1	
K34	HA100J2110	Oiler	1	1	
K35	H3207L0065	Thread a needle kit	1	1	
K36		Spanner	1	1	2.5mm
K37	H2008O0068	Belt cover (upper)	1	1	
K38	HA300B2170	Screw	10	10	11/64（40）×9
K39	H7115L8001	Belt cover	1	1	
K40	H7123L8001	Belt cover stand	1	1	
K41	H7124L8001	Supporter	1	1	

LP-9916 SPECIAL PARTS

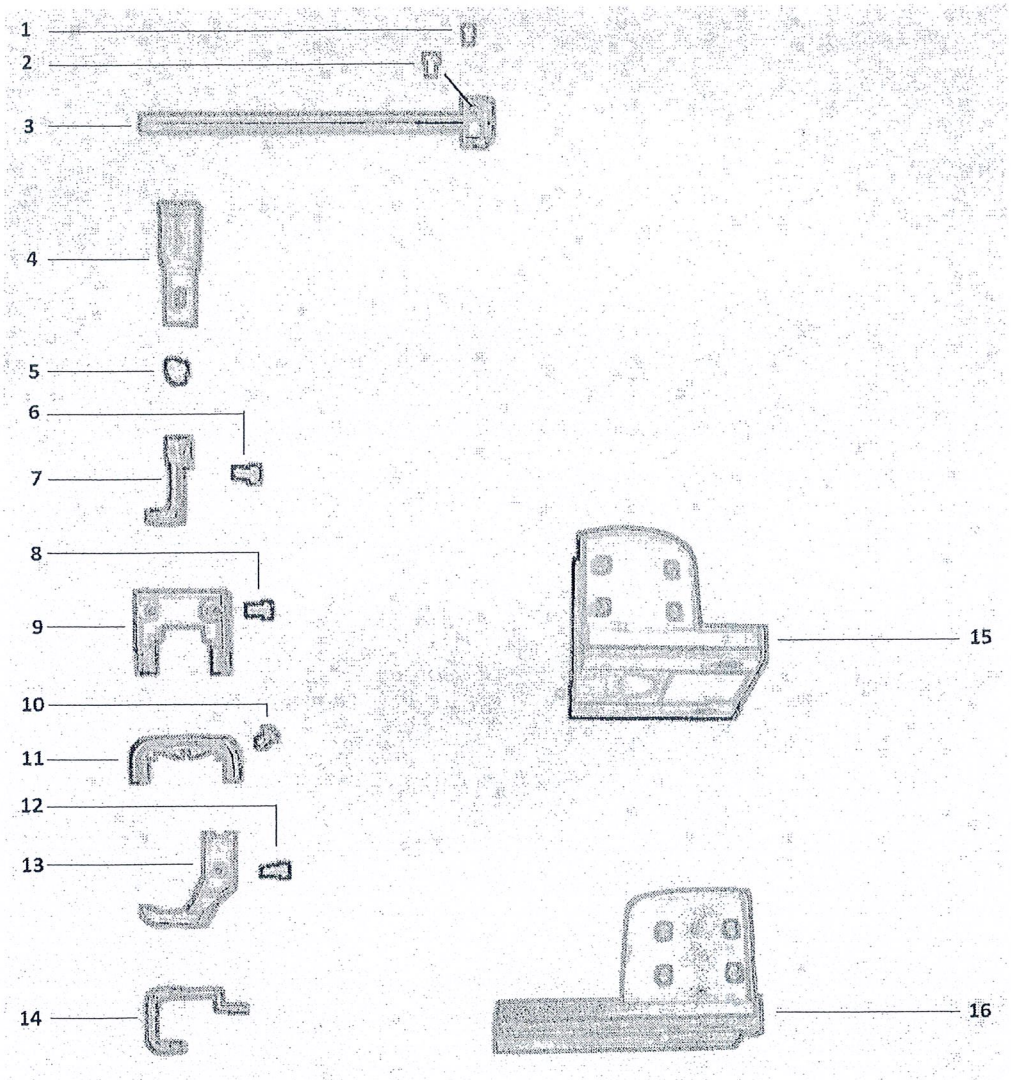

1.	120037	Needle clamp screw
2.	120245	Needle holder screw
3.	9916H4806	Needle bar assm.
4.	9916H7107	Feeddog
5.	H7108I8001	Feeddog screw
6.	9916HA700	Inner presserfoot screw
7.	9916H7106	Inner presserfoot
8.	H71H008	Needleplate base screw
9.	9916H7109	Needleplate
10.	123117	Needleplate screw
11.	9916H545	Needleplate
12.	H3200E2020	Outer presserfoot screw
13.	9916H7105	Outer presserfoot
14.	HE204I8001	Finger guard
15.	9916H7904	Right post base
16.	9916H7116	Left post base