GLOBAL

BH 783

Instruction & parts Manual

www.globalsew.com

info@globalsew.com

19.ADJUSTING THE OVERDGING WIDTH (STITCH WIDTH AND BAR TACKING WIDTH) AND OVEREDGING REFERENCE POSITION

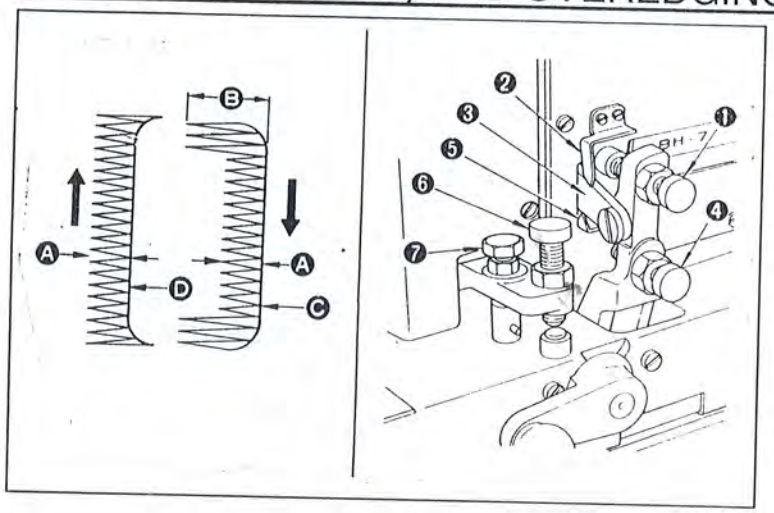

The needle swings from right to left with the right base line established as the reference position.
Perform the adjustment as follows:

1. To adjust stitch width Ⓐ , screw in or out screw ① , and set pointer ② to a desired value on scale plate ③ . The actually sewn stitch width will be the half of the set scale value (mm).
2. For adjustment of bar backing width Ⓑ , screw in or out screw ④ , and set pointer ⑤ to the value indicated by scale plate pointer ② , making the bar tacking width twice as large as the stitch width.
3. Adjust the position of right base line Ⓒ by screwing in or out screw ⑥ so that it is kept away from the cutting line of the knife. As screw ⑥ is screwed in, the right base line moves to the left.
4. Through your trial sewing, further perform fine adjustment.
5. It is not necessary to adjust the position of left base line Ⓓ since it remains unchanged when the stitch width is changed. However, the left base line should be moved to the left by screw ⑦ if it is cut by the knife.

20.CHANGING THE NUMBER OF STITCHES

Symbol	No.of stitches of small gears	No.of stitches of large gears	Symbol	No.of stitches of small gears	No.of stitches of large gears
A	54	345	I	93	200
B	62	300	Ⓙ	100	190
C	66	285	K	105	180
D	70	268	Ⓛ	110	170
E	74	252	M	115	160
F	79	238	Ⓝ	123	152
Ⓖ	83	225	O	130	145
H	88	212			

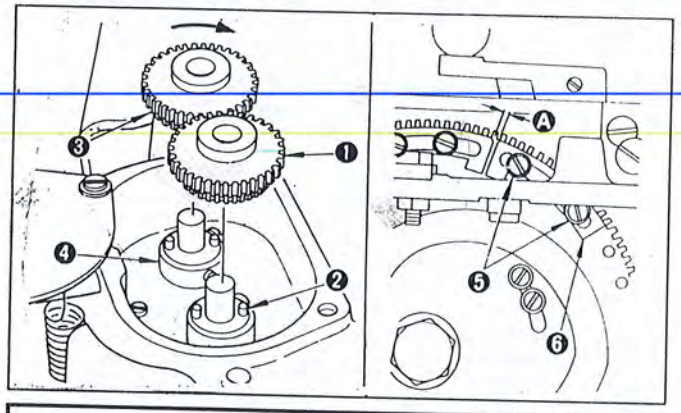

★ Spur gears

1. By selecting the spur gears, you can control the number of stitches as shown in the table.
2. Alphabetical marks like A, B,C, etc., and numerals like 123, 152, etc. are both engraved on each spur gear for identification.
3. Use a combination of gears which have the same alphabetical marks.
4. The numeral engraved on the gear installed in the rear position will represent the number of stitched provided by the combination of spur gears.

The circled alphabetical symbols in the above table show that the gears are included in the standard accessories. All other gears are optional attachments.

★ Attaching the spur gears to their shafts

1. Push gear ① into the shaft so that it is securely fixed by the pin on gear bushing ② located nearer to an operator.
2. For installing gear ③ on the pin of rear gear bushing ④ , push gear ③ into the shaft while turning it in the arrow direction.

★ Adjusting the low-speed cam position

Loosen setscrews ⑤ ,and adjust the position of low-speed cam ⑥ to set clearance Ⓐ as shown below:

Number of stitches	Clearance Ⓐ
93 stitches or less	10 ~ 12mm
115 stitches or less	5mm
123 stitches	0

21.ADJUSTING THE PRESSER BAR PRESSURE

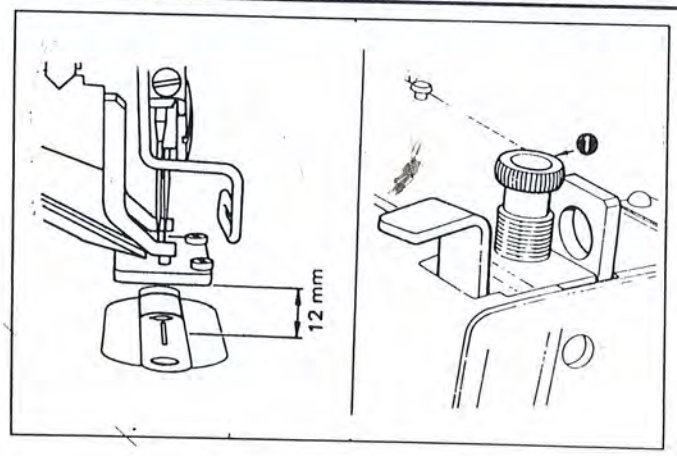

The presser bar goes up 12mm when the pedal is fully stepped down.
To adjust the pressure applied by the presser bar to fabric, turn presser spring regulator ① .When the pressure is not enough to prevent fabric from puckering, turn regulator ① clockwise.

16.THREAD TENSION

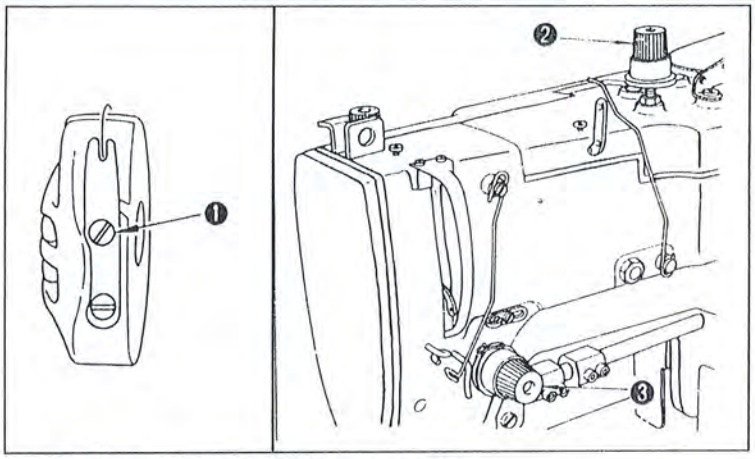

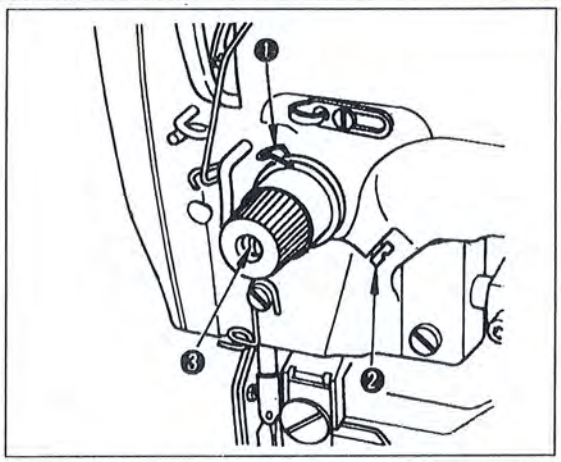

★ Adjusting the thread tension for purl stitch:

1.Adjust the bobbin thread tension to approx. 15 to 20g by adjusting screw ① of the bobbin case.

2.Adjust tension controller No. 1 ② for proper needle thread tension so that the bar-tack part is formed by well-shaped whip stitches. If the tension is too low, bar tacking seam may form thread knots on the rear face of fabric.

3.Adjust tension controller No. 2 ③ for proper tension of the pallarel side seams by judging from the stitch formation.

★ Adjusting the thread tension for whip stitch:

1.Adjust the bobbin thread tension to approx. 40 to 50g by adjusting screw ① of the bobbin case.

2.Exchange the adjusting springs of tension controllers No. 1 ② and No. 2 ③ each other (the tension controller No. 2 will have a weak spring).

3.Adjust tension controller No. 2 ③ to prevent ravelling off at the end of a seam.

4.The stitches of the parallel sides or bar-tack can be adjusted by tension controller No. 1 ② .

★ Adjusting the thread take-up spring (for purl stitch)

The suitable range of the stroke of thread take-up spring ① is from 6 to 8mm with a starting tension of 20 to 50g.

For adjusting the stroke of the thread take-up spring, loose screw ② , and insert a thin screwdriver into the slit of tension post ③ to turn the tension post.

To adjust the' tension of the thread take-up spring, insert a thin screw driver into the slit of tension post ③ to turn it, with screw ② tightened. The tension of the thread take-up spring increases when the tension post is turned clockwise, and decreases when turned counterclockwise.

17.ADJUSTING THE OVEREDGING LENGTH(BUTTONHOLE LENGTH)

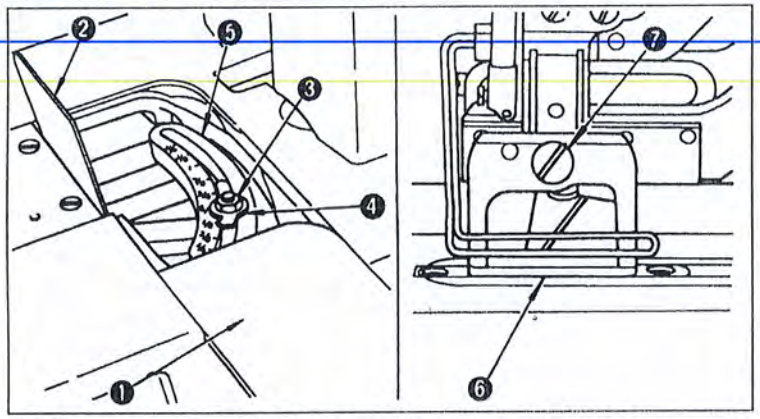

1.Pull out cover ① , and raise cover ②.

2.Loosen nut ③ by the spanner supplied with the machine. Set point ④ to a desired length on scale ⑤ (this length is the same with the knife width), and then retighten nut ③.

3.Through your trial sewing, adjust the overedging length accurately to the extent that the bar tacking seams are not cut by the knife.

★ Changing the work clamp check

Use work clamp check ⑥ having the size nearly the same as that of a buttonhole length.

By removing setscrew ⑦ ,a work clamp checks can be changed together with a work clamp check holder as a set.

Work clamp check/Work clamp check holder set Part No.	Applicable knife width
F805060A、F805080A	1/4" ~3/4"
F805060B、F805080B	1/4" ~1"
F805060C、F805080C	1/4" ~1-1/4"

18.REPLACING THE KNIFE

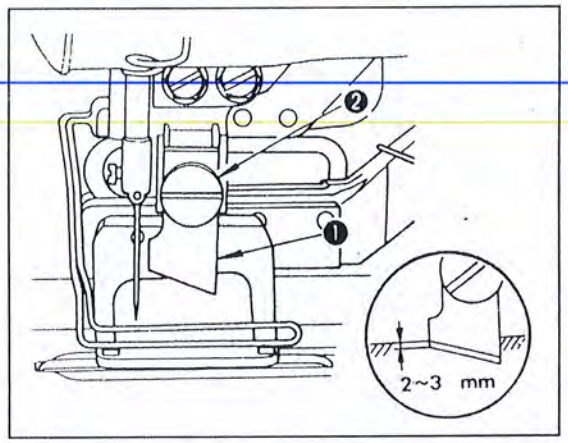

When sharpening or replacing the knife, remove it as follows:

1.Loosen setscrew ② , and remove knife ① together with the washer.

2.Attach the knife to the knife holder so that the higher end of the slanted knife blade comes down 2 to 3mm above the surface of the throat plate when the knife is brought down to the lowest position.

(NOTE):Do not forget to install the washer when retightening the setscrew.

11.THREADING THE NEEDLE-THREAD

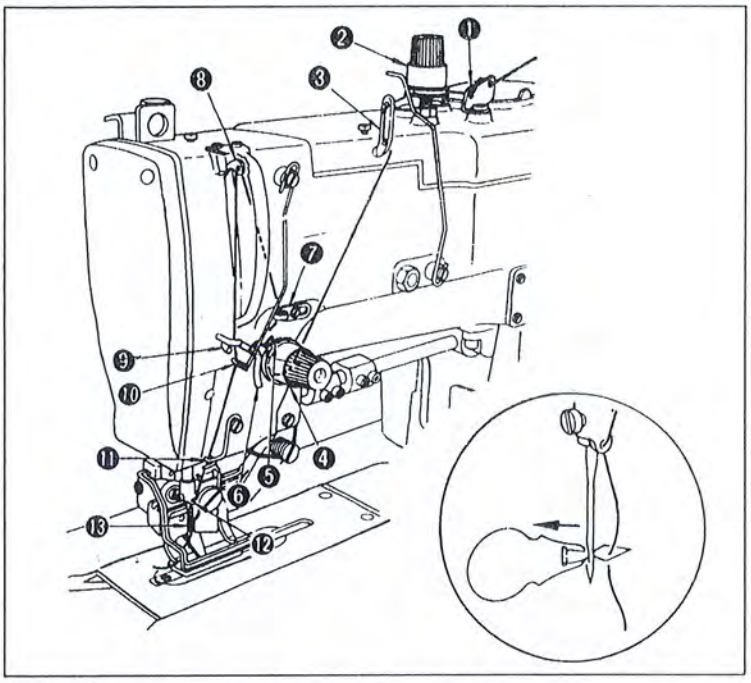

1.Pass the needle thread in the order as shown in the figures.
2.The threading can be done easily by using the needle threader supplied with the machine.

12.REDUCTION OF SEWING SPEED AND EMERGENCY STOP

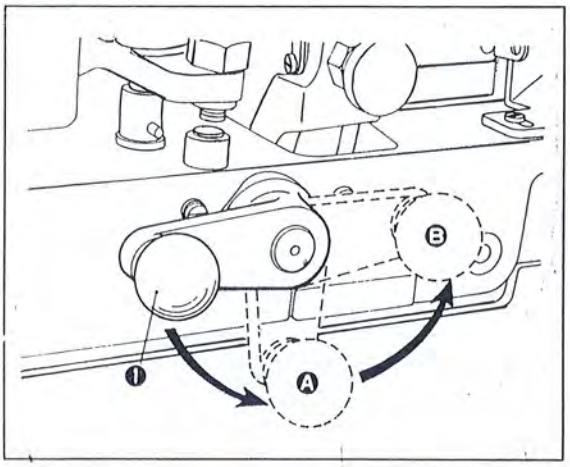

★ Reduction of sewing speed
1.Turn hand stop crank ① downwards to position Ⓐ , and
2.the machine will be immediately slowed down.

★ Emergency stop
1.Turn the hand stop crank downwards to position Ⓐ , and further upwards to position Ⓑ and
2.the machine will stop immediately.
(NOTE) When the hand stop crank do not return, push it down.

13.MANUAL FEED HANDLE

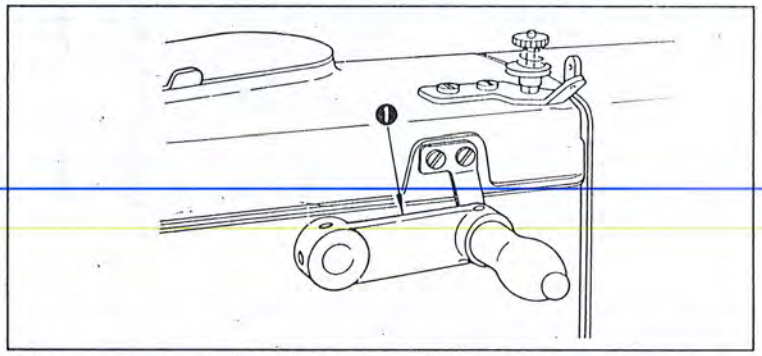

When you want to feed fabric manually after giving and emergency stop or to resume sewing from the point at which thread was broken, rotate manual feed handle ① to operate the cloth feeding mechanism.
(NOTE) Confirm that the needle does not stick in fabric before turning the manual feed handle.

14. HOW TO HOLD THE DESCENDING KNIFE

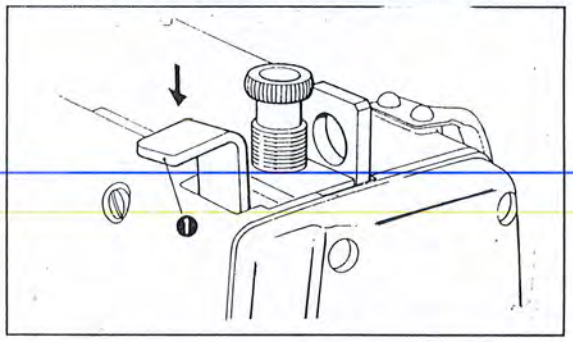

When you do not want to cut fabric after sewing because of thread breakage or some other reasons, keep on pressing down knife stop lever ① lightly until the machine stop. Then the knife will not descend.

15.TYPES OF STITCHES

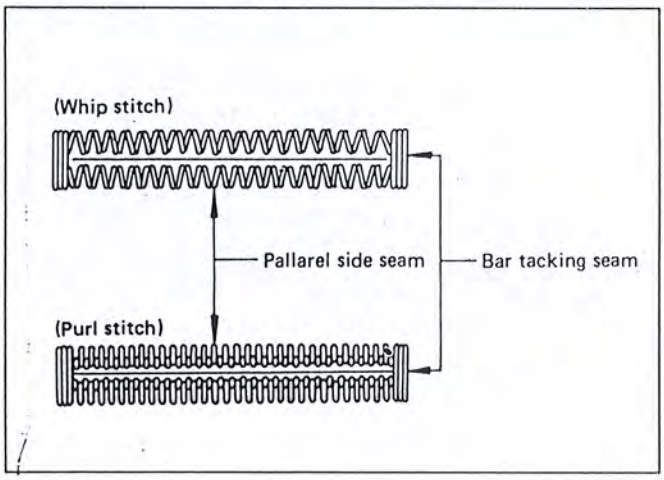

This machine is capable of forming two different types of stitches, namely whip stitch and purl stitch.

(Whip stitch)
The whip stitch is formed in zigzag showing the needle thread only on top of fabric, and the bobbin thread on the bottom.

(Purl stitch)
When applying higher tension to the needle thread to permit it to pass straight through fabric, the purl stitch is formed by the bobbin thread which is pulled over from both sides to the center line.

6.LUBRICATION

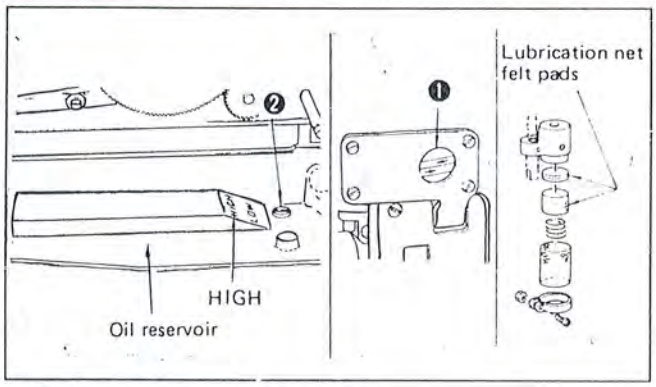

★ Before starting the machine:

1. Fill the oil resevoir with sewing machine Oil No. 1 up to the level indicated by "HIGH."
2. When the machine is operated after the oil reservoir has been filled with oil, the oil is seen to run through the two pipes from oil sight window ① as far as the sewing machine is normally lubricated. (Low speed operation permits easier observation of the lubricating oil.)
   If dirty oil is used, dust will accumulate on the lubrication net felt pads, shown in the figure, impairing smooth flow of the oil from the machine. In this case, it is necessary to drain the oil from the machine base and fill it with fresh oil and to remove the felt pads and wash them clean.
3. If the oil gets stained, loosen drain screw ② to drain the dirty oil from the machine base and fill it with fresh oil.

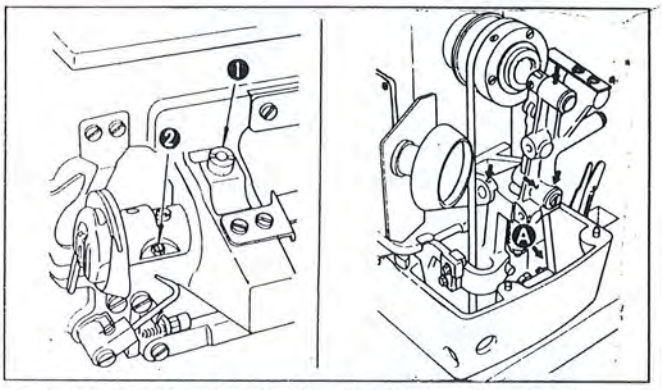

★ Adjusting the lubrication for the sewing hook

Adjust the volume of lubricating oil supplied to the sewing hook by turning oil adjusting screws ① for rough adjustment, and ② for fine adjustment; oil volume is reduced when turning the screws clockwise.

★ Other lubricating points

1. Apply one or two drops of lubricating oil to the arrowed points once a week or every other week.
2. Apply two or three drops of lubricating oil only to point when the machine is newly set up or has been out of use for long time.

7.HOW TO INSTALL THE NEEDLE

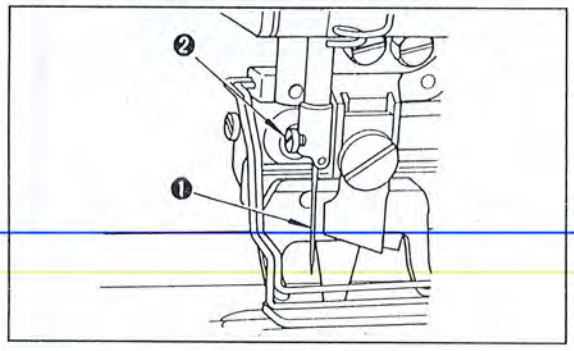

★ Turn off the motor power. Use a DPx 5J needle.

1. Loosening needle setscrew ②, hold neeedle ① with its recessed part facing toward the operator,
2. insert the needle fully into the needle clamping hole, and
3. securely tighten the needle setscrew.

8.INSTALLATION/REMOVAL OF BOBBIN CASE

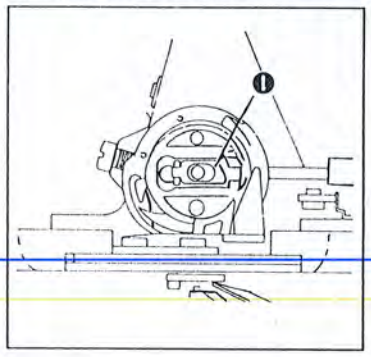

1. Lift up and hold bobbin case latch lever ① between two fingers to remove it from the hook. A bobbin does not fall off the bobbin case while the latch lever is lifted up.
2. For installation of the bobbin case, push the bobbin case into the hook so that it is supported by the hook shaft, and then snap in the latch lever.

9.WINDING THE BOBBIN

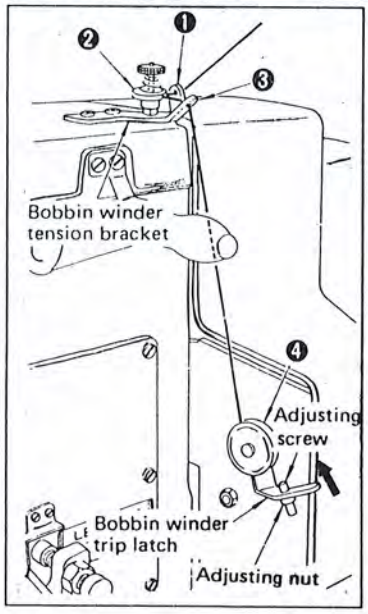

1. Fit a bobbin onto the bobbin winder shaft.
2. Take the thread from the spool and pass it through the guides in the numerical order shown in the figure, and wind the end of the thread several turns around the bobbin.
3. Push the bobbin winder trip latch in the arrow direction, and the bobbin will be wound.
4. Loosening the adjusting nut, perform adjustment by screwing in or out the adjusting screw so that the bobbin is wound about four-fifths full.
5. If the bobbin is wound unevenly, adjust the position of the bobbin winder tension bracket for proper and even winding.

10.ATTACHING THE BOBBIN

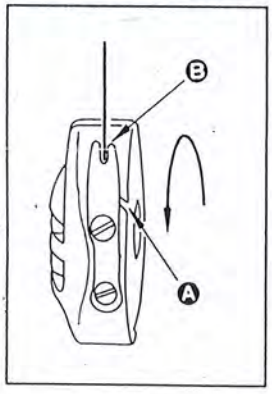

1. Hold and place a bobbin into the bobbin case so that the bobbin is wound counterclockwise.
2. Passing the thread through thread outlet of the bobbin case, pull the thread, and the thread can be drawn out from thread outlet , passing under the bobbin winder tension spring.

☆ Set the bobbin so that it rotates in the arrow direction when the bobbin thread is pulled.

2.SETTING UP THE THREAD STAND

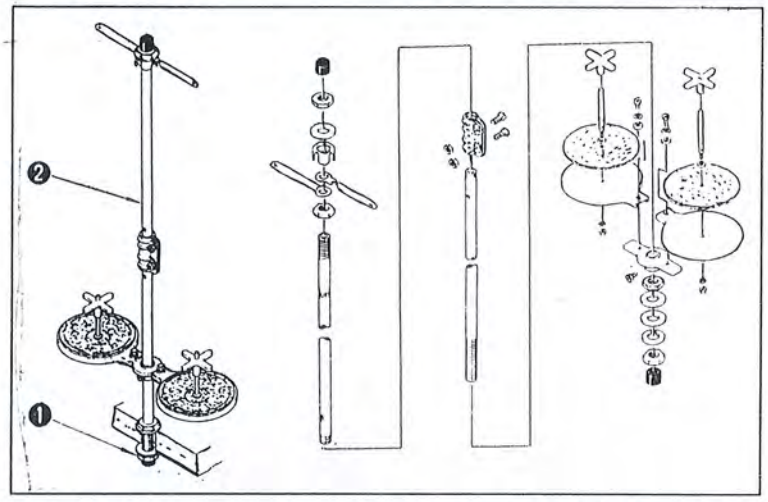

Assemble the thread stand, and fix it in the table hole. Then tighten lock nut ① to fix the thread stand. If ceiling wiring can be made, Pass the power cable through spool rest rod ② .

3.SETTING UP THE MACHINE HEAD

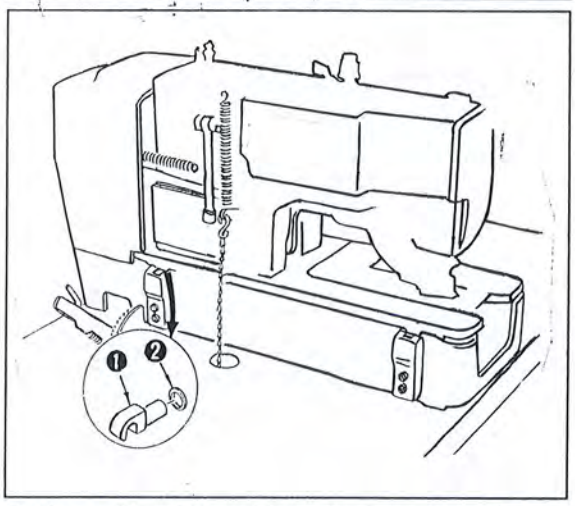

Putting cushion ② into hinge ① , insert hinge ① into the machine head. Then, place the machine head on the machine base.

4.ATTACHING THE FLAT BELT

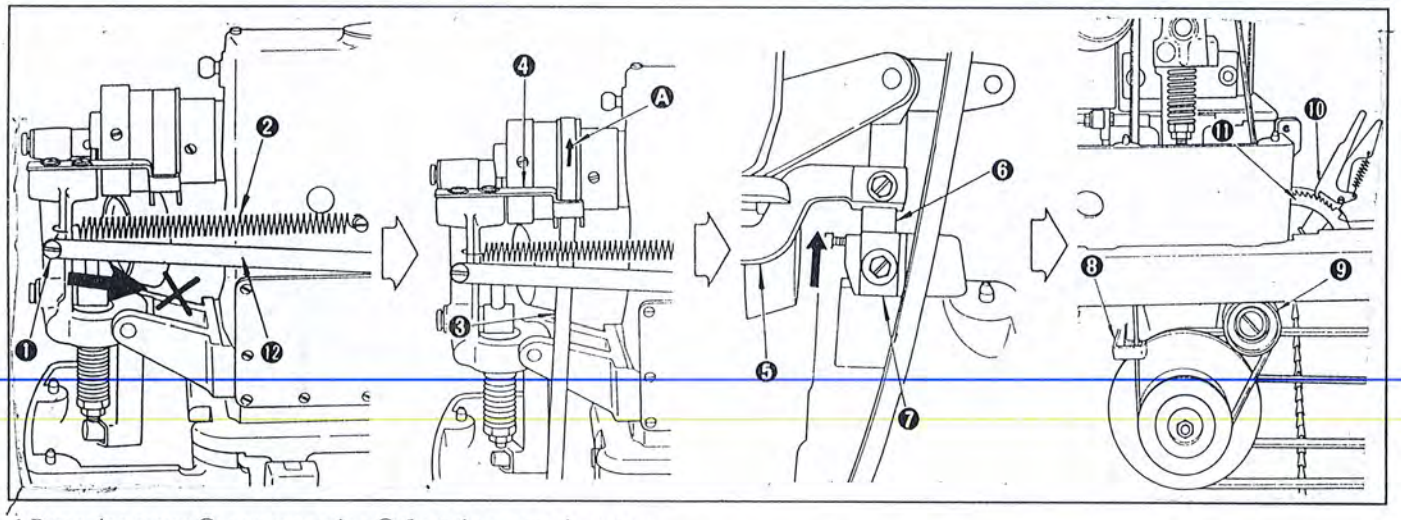

1.Removing screw ① ,remove spring ② from the suspension screw.
At this time, be careful not to push the starting link driving rod in the arrowed direction.
2.Pass belt ③ through belt shifter ④ so that the belt rotates in arrow Ⓐ direction.
3.Reinstall screw ① and spring ② .
4.Lift tripping lever ⑤ in the direction, pass the belt between latch B ⑥ and latch A ⑦ .
5.Passing belt shifter ⑧ of the speed transmitter, attach the belt onto tension pulley ⑨ .
6.Put fixing paw1 ⑩ in the second groove from the bottom of ratchet ⑪ to provide the belt with tension.
(NOTE) Some expansion or contraction in the belt caused by temperature or humidity may make it rather difficult to install the belt. However, the belt will restores its original length while in use.

5. INSTALLATION/REMOVAL OF BELT COVER

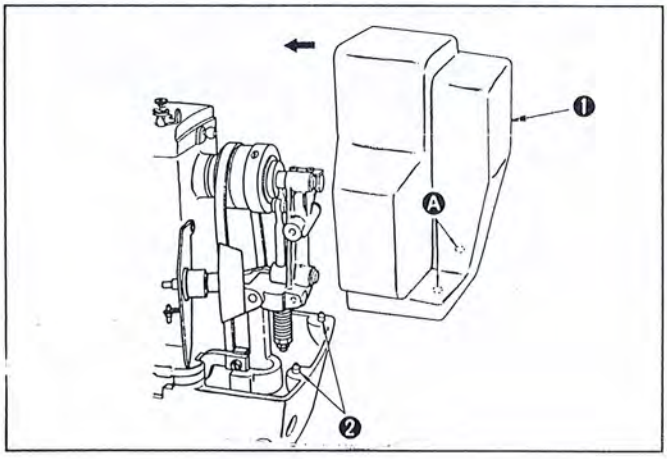

Aligning guide pin ② with hole Ⓐ in belt cover ① , push the belt cover in the arrow direction until it snaps.
For removal of the belt cover, loose the setscrew, then bring down the belt cover in the direction opposite to the arrow, and slide it up.

HIGH SPEED SINGLE NEEDLE LOCKSTITCH STRAIGHT BUTTON HOLING SEWING MACHINE

INSTRUCTION MANUAL

Before operating your lock-stitch Machine, please read this Instruction Manual carefully in order to operate it in the correct and efficient manners.

CAUTIONS IN OPERATION

1. The machine should rotate counterclockwise as observed from the pulley. Take care not to rotate the machine in the opposite direction.
2. Never start the machine before filling the machine base with lubricating oil.
3. Remove the bobbin case and the needle thread from the machine before performing the trial operation.
4. Clean up the sewing hook and the bobbin thread trimmer every day after sewing work. Also check the level of the lubricating oil.
5. Never bring your fingers or hair close to, or place anything on the handwheel, V-belt, bobbin winder wheel or motor during operation. It may lead to serious personal injuries.
6. If your machine is provided with a belt cover, finger guard and eye guard, never operate your machine with any of them removed.

1. MOTOR PULLEY AND V BELT

1. Motors of 370W, 4-pole are used.
2. M-type V belts are used. Refer to the following table for the motor pulleys, V belt length, and sewing speed.

Sewing speed	Frequency	Motor Pulley part No.	High speed V belt	Low Speed V belt
3000s.p.m	50Hz	F8J0020	44 inch	42 inch
	60Hz	F8J0020A	42 inch	42 inch

3. Model GT10×1100 flat belt (W×H×L=10×3×1100)are used.

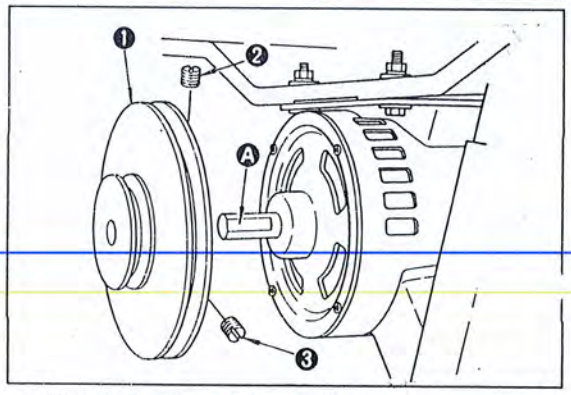

★ How to install motor pulley

Place motor pulley ① into the motor shaft so that flat part of the motor shaft aligns with first setscrew ② . Then securely tighten setscrews ② and ③

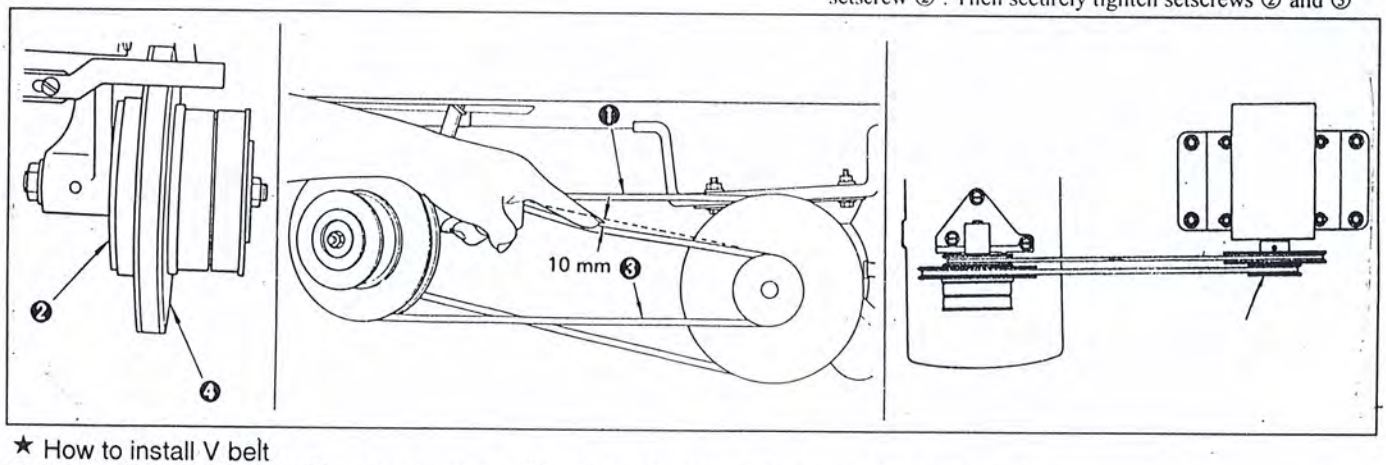

★ How to install V belt

1. Mount high-speed V belt ① on accelerating pulley ② and the large diameters of the motor pulley.
2. Mount low-speed V belt ③ on low-speed pulley ④ and the small diameters of the motor pulley.
3. By moving the motor from side to side, adjust the tension of V belts ① and ③ so that they give an approx. 10 mm slack when their middle portions are pushed lightly by hand.
4. Move the motor pulley back and forth to align V belts ① and ③ .

BH 783 HIGH SPEED STRAIGHT BUTTONHOLING INDUSTRIAL SEWING MACHINE

MODEL	SEWN PATTERN	TYPE OF STITCHES	KNIFE SIZE (A)	BUTTON HOLE LENGTH (B)	BUTTON HOLE WIDTH (C)
BH 783	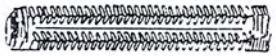	WHIP STITCH AND PURL STITCH	6,35 – 31,75 MM	MAX. 40 MM	2,5 – 5 MM

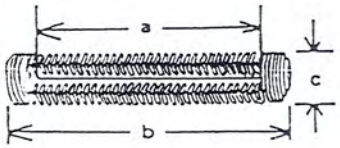

CONTENTS

- 1
  Instruction Manual
- 13
  Instruction For Set Up
- 29
  Parts List

22.NEEDLE-TO-HOOK RELATION

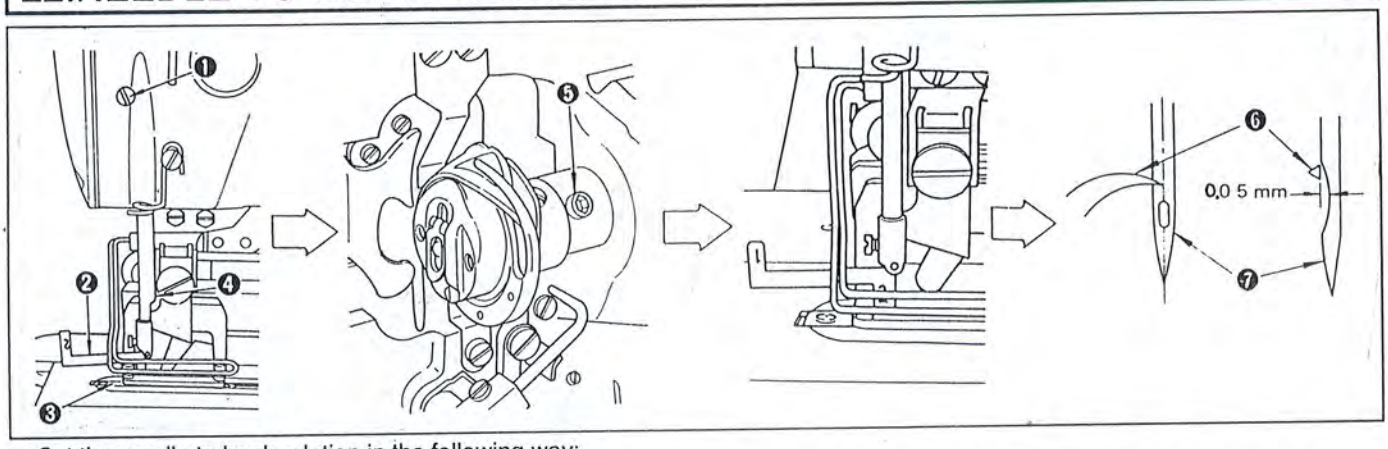

★ Set the needle to hook relation in the following way:

1.Bring down the needle bar to the lowest point when the needle is coming down through the center of the needle hole on the throat plate.

2.Loosen needle bar connection screw ①, and adjust the height of the needle bar.

(Setting the needle bar)

3.Insert the part " 1 " of timing gauge ② into the gap between the bottom end of needle bar ④ and throat plate ③.

4.Retighten the needle bar connection screw to adjust the position of the sewing hook.

(Setting the hook)

5.Loosen setscrew ⑤ of the hook sleeve by the bar spanner supplied with the machine.

6.Rotate the driving pulley in the correct direction until the needle starts to go up from its lowest point.

7.Insert the part " 2 " of the timing gauge into the gap between the bottom end of the needle bar and the throat plate, where the bottom end of the needle bar touches the top of the part "2" of the timing gauge.

8.Align blade point ⑥ of the sewing hook with the center of needle ⑦ ,and make adjustment so that a clearance of approx. 0.05mm (1/508") is provided between the needle and the blade point of the hook. Then, securely retighten the setscrew of the hook sleeve.

(NOTE): If stitches are skipped, lower the needle bar by approx. 0.5mm(1/64")from the timing gauge " 1 ".

23.ADJUSTING THE BOBBIN THREAD WINDER

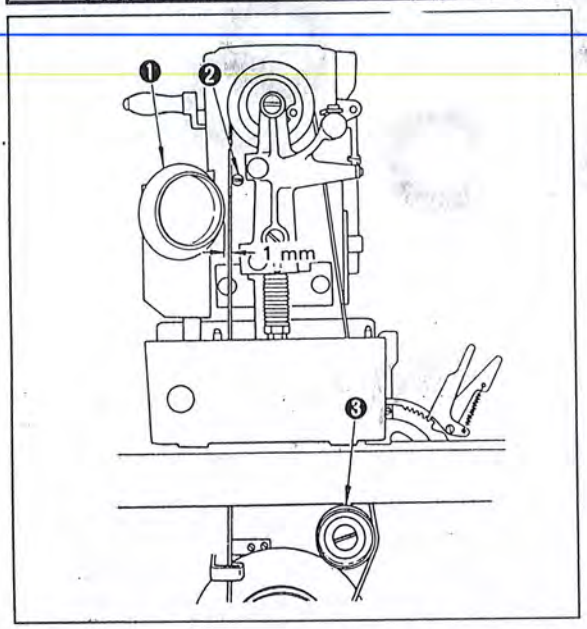

Loosen screw ② to make adjustment so that the clearance between bobbin thread winder pulley ① and belt ② becomes approx. 1mm (3/64") when pulley ① is apart from the belt.

If, however, the belt touches the pulley, adjust the tnesion by tension pully ③ to decrease the deflection of the belt. And if the belt still touches the pulley, increase the clearance to more than 1mm (3/64").

24.ADJUSTING THE SPEED TRANSMITTER

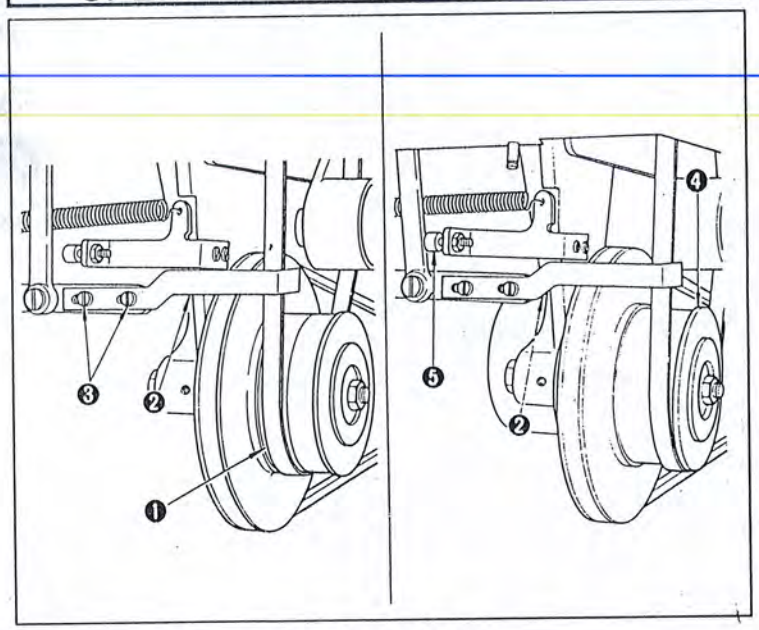

★ Adjustment of the position of the belt shifter

When the hand stop crank is turned down to the low speed position, loosen screw ③ and allow the belt to move onto low-speed pulley ①, moving the position of belt shifter ②.

★ Adjusting the stopper screw

Perform adjustment by stopper screw ⑤ so that belt shifter ② does not cause the belt to come off high-speed pulley ④ during high speed operation.

25.ADJUSTMENT OF THE NEEDLE THREAD TRIMMER

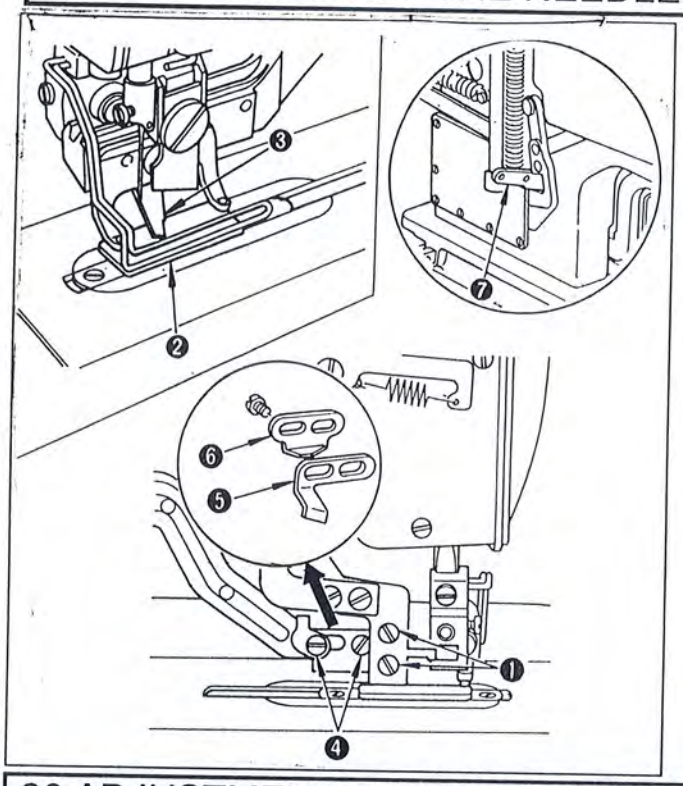

★ Attaching the trimmer

Loosen setscrew ① , and adjust the height of trimmer ③ .Set the height of trimmer ③ as low as possible, provided that it does not touch work clamp check ② ,in order to minimize the length of remaining thread on the needle after trimming.

★ Closing timing of the needle thread trimmer

Adjust the closing timing of the needle thread trimmer so that the trimmer completely closes when it advances farthest. To perform the adjustment, loosen screw ④ , and move needle thread trimmer driving plate A ⑤ back and forth. When the needle thread trimmer driving plate is moved towards you, the closing timing is delayed with reduced amount of closing.

(NOTE) Confirm that and allowance of 0.3 to 0.5 mm is left between the blades of the trimmer when the trimmer has completely closed.
If there is no such allowance, the trimmer would interfere with the operation of the needle thread trimmer driving plate, preventing smooth movement of lifting lever ⑦ .

★ Opening timing of the needle thread trimmer

Adjust the timing of the thread trimmer so that the trimmer begins to open gradually at a distance of approx. 2.5 to 3mm (3/32" to 1/8") from the start.

To perform the adjustment, loosen screw ④ , and move needle thread trimmer driving plate B ⑥ back and forth. As it moves towards you, the trimmer begins to open earlier.

★ (NOTE): Take care not to cause the already fixed needle thread trimmer driving plate A to get out of position.

26.ADJUSTMENT OF NEEDLE THREAD TRIMMER HOLDER AND LIMITING PLATE

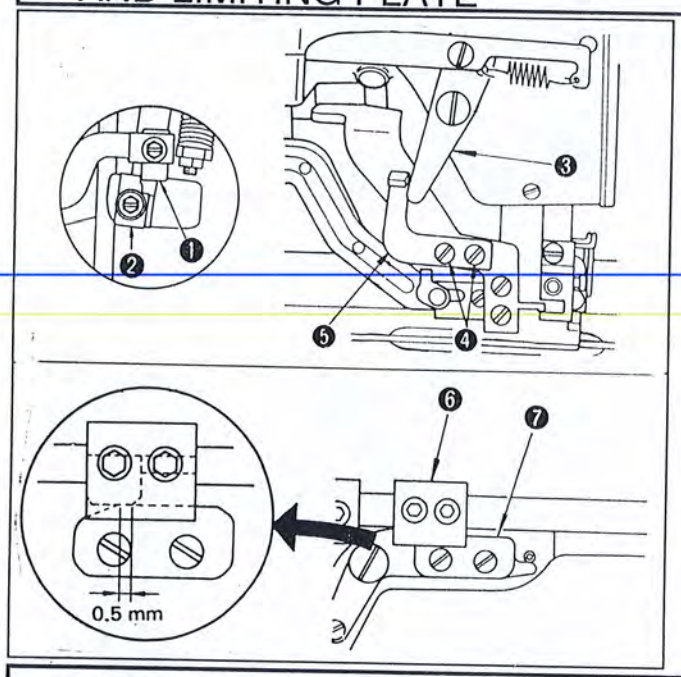

Loosen setscrew ④ , and install and adjust limiting plate ⑤ so that it comes in contact with the blocking arm ③ at the time of slow start of the machine (when latch B ① is engaged with latch A ②).

Needle thread trimmer holder ⑥ should be installed in such manner that it engages with cam ⑦ by 0.5mm (1/64")when the needle thread trimmer opens.

27.TIMING FOR DROPPING THE KNIFE

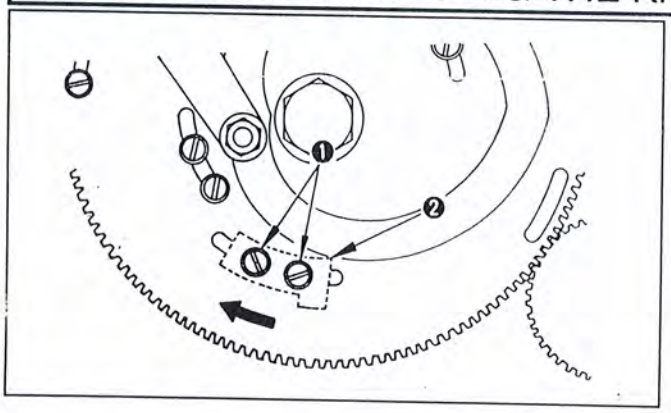

Loosen screws ① , and move knife tripping segment ② in the direction shown by the arrow, and the knife will drop earlier. Adjust it so that the knife drops two to three stitches before the machine stops.

28. TROUBLE, CAUSE, AND REMEDY

Trouble	Cause	Remedy	Page
1.Needle thread is broken	(1)The tension of the tension controller No. 2 is too tight.	o Decrease the tension of the tension controller No. 2	7
	(2)The tension or the stroke of the take-up spring is too great.	o Decrease the tension or the stroke of the take-up spring.	7
	(3)Blade point of sewing hook has burr or scratches.	o Buff the blade point of the sewing hook, or replace the sewing hook.	9
	(4)Poor timing of the sewing hook.	o Readjust the sewing hook's timing by the timing gauge.	
	(5)The thread Path has scratches.	o Buff the thread path by cloth files, etc.	9
	(6)The needle is too thin.	o Replace by a thick needle.	5
2.Thread slips out of the needle.	(1)The needle thread trimmer opens too early.	o Move back the needle thread trimmer driving plate B.	10
	(2)The needle thread trimmer opens when the work clamp check is comming down.	o Move back the needle thread trimmer driving plate B.	10
	(3)The whip stitch is not formed at the start of sewing.	o Decrease the tension of the tension controller No.1.	7
	(4)Wrong threading.	o Perform correct threading.	6
3.Wobbling stitches are formed in the overedging seams.	(1)The tension disc No. 2 is too loose.	o Increase the tension of the tension disc No.2.	7
	(2)The tension and stroke of the take-up spring is not enough.	o Readjust the take-up spring.	7
	(3)Bobbin thread tension is too high.	o Decrease the bobbin thread tension (15 to 20g for purl stitches).	7
4.Wobbling stitches are formed at the start of sewing.	(1)The tension disc No. 1 is too loose.	o Increase the tension of the tension disc No. 1 (15 to 30g).	7
	(2)The position of the needle thread trimmer is too high.	o Lower the trimmer as low as possible, provided it does not come in contact with the work clamp check.	10
	(3)The stroke of the take-up spring is too great.	o Decrease the stroke of the take-up spring, and increase the spring pressure.	7
5.The needle thread at the first bar tacking comes out and lumps on the bottom of cloth	(1)The tension disc No. 1 is too loose.	o Increase the tension of the tension disc No. 1.	7
	(2)The bobbin thread tension is too high.	o Decrease the bobbin thread tension (15 to 20g).	7
6.Stitches float over cloth.	(1)Bobbin thread tension is not enough.	o Increase the bobbin thread tension.	7
	(2)Bobbin thread slips out of the thread path on the bobbin case.	o Properly thread the bobbin case.	5
7.Stitches are skipped.	(1)The work clamp check is too large for the buttonhole.	o Change the work clamp check with a smaller one .	7
	(2)The cloth is made of light-weight materials.	o Delay the timing of the needle and the sewing hook. (Lower the needle bar by approx. 0.5mm(1/50")	9

29.STITCHING TROUBLES CAUSED BY OTHER REASONS

Trouble	Cause	Remedy	Page
1.Starting pedal does not work. (The work clamp arm is not lifted up fully.)	(1)Needle plate, needle plate base or bobbin thread trimmer is clogged with fibrous dust. (2)The needle thread trimmer is interfered by the work clamp check or the trimmer driving plate.	o Tilt the machine head and clean them up. o Readjust the installation of the trimmer, or the position of the trimmer driving plate.	 10
2.Machine does not reach the high speed even when the pedal is stepped down fully.	(1)The hand stop crank is not in the correct position. (2)The belt shifter of the speed transmitter has not changed to the high speed pulley.	o Correct the position of the hand stop crank. o Lubricate the shifter driving pin.	6
3.A loud noise is produced with a stop-motion, or sewing speed does not lower at the end of sewing.	(1)Improper setting of the low speed cam for small numbers of stitches. (2)The flat belt is too loose. (3)The low speed V belt is too loose.	o Readjust the setting of the low speed cam. o Increase the belt tension by the tension pulley. o Increase the tension of the V belt by the motor.	8 4 3
4.Stop-motion is not smooth.	(1)Stop-motion lever needs lubrication (2)The belt shifter of the speed transmitter has not changed to the low speed pulley.	o Lubricate the stop-motion lever. o Readjust the position of the belt shifter.	5 9
5.The machine does not lubricate.	(1)Oil level in the oil reservoir is too low. (2)Oil is not circulated.	o Fill the lubricating oil up to "HIGH" mark o Apply oil to the oil return felts.	5 5
6.Knife is dropped during high speed rotation.	(1)Position of the knife tripping segment is not correct. (2)The setting of the low speed cam for few numbers of stitches is not correct.	o Adjust the position of the driving cam so that the knife is dropped down at a delayed timing. o Correct the setting of the low speed cam.	10 8
7.Knife is dropped even if the needle thread is broken	(1)The machine is threaded incorrectly.	o Correct the threading.	6
8.Needle is broken.	(1)The needle is bent. (2)The needle and the hook blade touch. with each other. (3)Needle thread trimmer hits the needle when opening its blades.	o Replace the needle o Readjust the positions of the needle and the sewing hook. o Readjust the position of the trimmer. o Adjust so that the limiting plate and the blocking arm touch each other at the time of starting.	5 9 10 10

30.SPECIFICATIONS

	BH 783
Application	Buttonholing for ordinary cloth, knit, etc.
Sewing speed	Max. 3,600 s.p.m.
Buttonhole length	6.4 ~ 31.7mm (1/4" ~ 1-1/4")
Bar-tack width	2.5 ~ 5.0mm(3/32" ~ 3/16")
Needle	DP × 5J #11 ~ #14
Presser lift	12mm(15/32")
Lubricating oil	LUBRICATION OIL
Dimensions (L × W × H)	660mm × 240mm × 385mm
Weight	59kg

INSTRUCTION FOR SET UP

1.Installing the tension pulley(asm.)

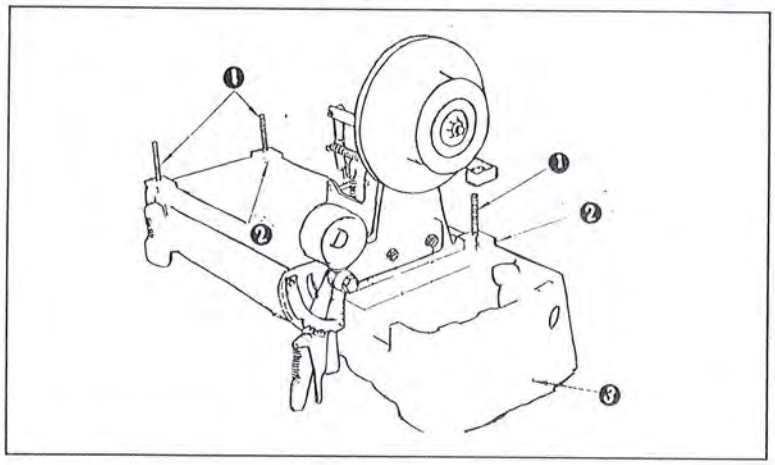

1)Install stud ① and machine head base seat felt ② on machine head base ③ .

2)Fully lubricate the shifter driving pin and the drving pin base again. Also lubricate the end of the shifter driving pin and the head of the screw of the shifter pin bracket.

2.Installing the machine head base (asm.)

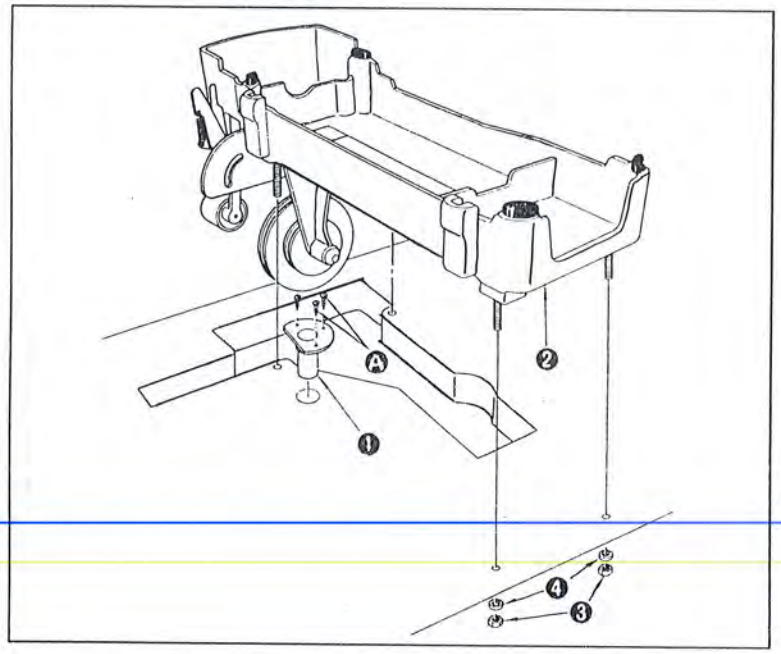

1)Fix drain funnel ① to the drain hole (Φ 25) in the table by wood screw Ⓐ .

2)Placing the machine head base ② (asm.) on the table, fix it by tightening nut ③ (flat washer ④ is used) from the bottom of the table.

3.Installing the motor

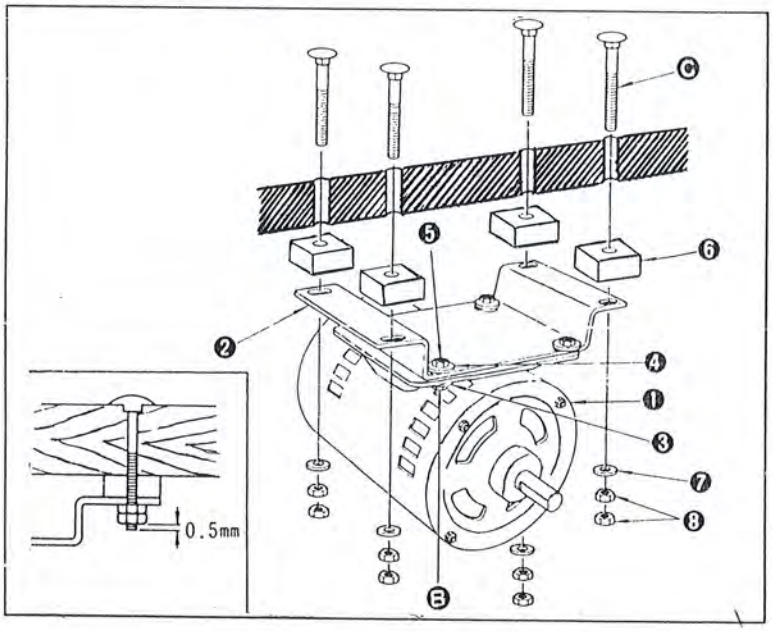

1)Install motor ① on motor base ② by screw Ⓑ (flat washer ③ , spring washer ④ ,and nut ⑤ are used).

2)Placing spacer ⑥ between the table bottom and the motor base, fix the motor base by installing bolt Ⓒ (a flat washer ⑦ and nut ⑧ are used).

Tighten the nuts so that the lower nut is levelled with the end of bolt Ⓒ or bolt Ⓒ projects by 0.5mm.

How to install the safety plate

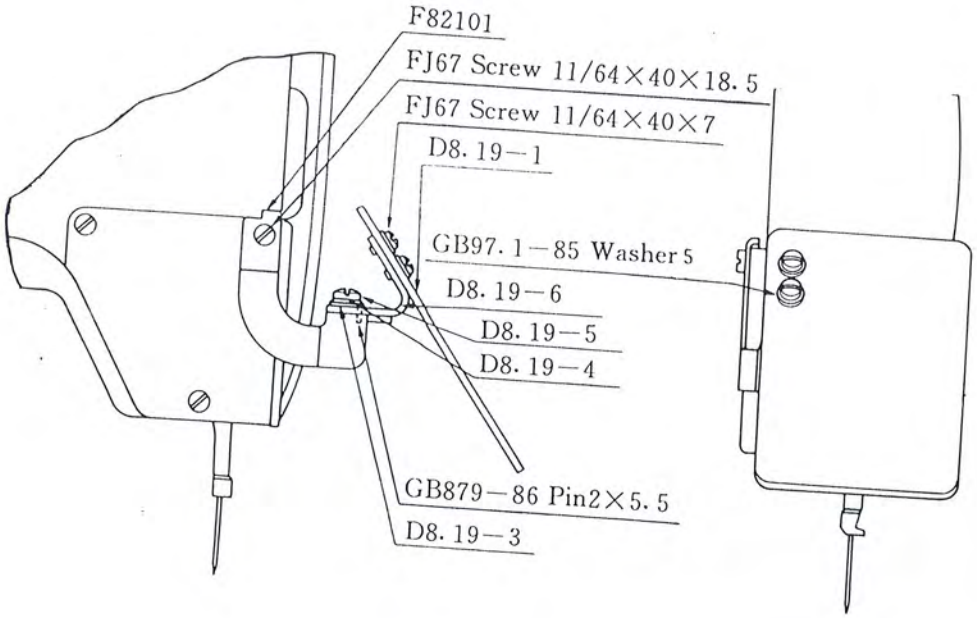

Install the safety plate at the position shown in the figure by means of safety plate installing bracket set screw.

HIGH SPEED SINGLE NEEDLE LOCKSTITCH
STRAIGHT BUTTONHOLING SEWING MACHINE

PARTS LIST

1.

FRAME & MISCELLANEOUS COVER COMPONENTS

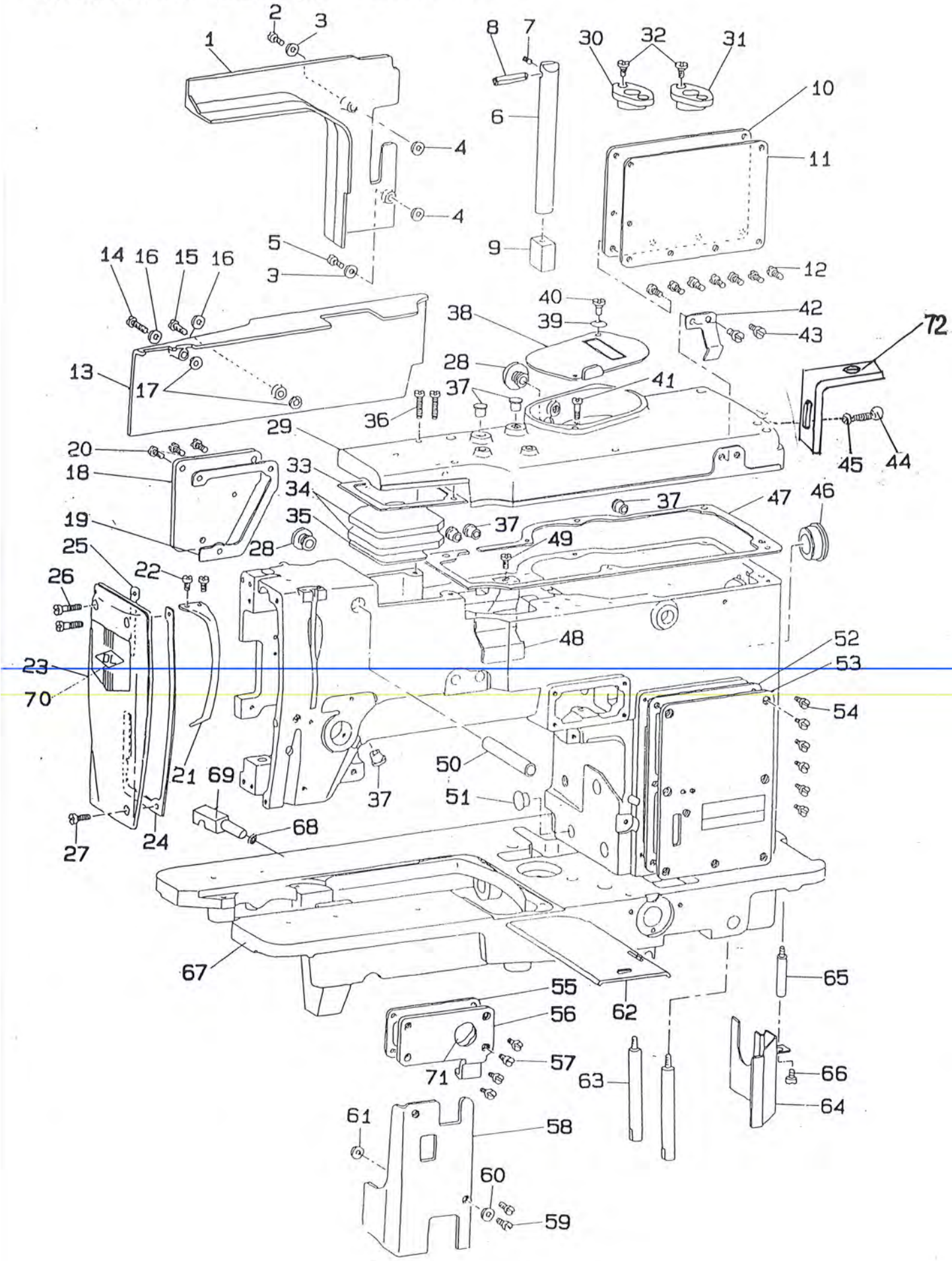

			Description	Qty
1	F80125		FRAME SIDE COVER	1
2	FJ65		SCREW 11/64-40 L=12	1
3	F80131		WASHER	2
4	F80133		CUSHION	2
5	FJ65		SCREW 11/64-40 L=12	1
6	F80122		MACHINE ARM SUPPORT ROD	1
7	FJ74		SCREW 11/64-40 L=5	1
8	GB879-86		PIN	1
9	SJ1-16		RUBBER CUSHION	1
10	F80119		SIDE COVER	1
11	F80137		SIDE COVER GASKET	1
12	FJ65		SCREW 11/64-40 L=9	7
13	F80123		FRAME SIDE COVER	1
14	FJ65		SCREW 11/64-40 L=22	1
15	FJ65		SCREW 11/64-40 L=18	1
16	FJ80133		CUSHION	2
17	F80135		FRAME SIDE COVER GASKET	2
18	F80127		LEFT SIDE COVER	1
19	F80130		SIDE COVER GASKER	1
20	FJ65		SCREW 11/64-40 L=9	3
21	F80104		THREAD TAKE-UP LEVER OIL GUARD	1
22	FJ65		SCREW 9/64-40 L=5	2
23	F80102		FACE COVER COMPLETE	1
24	F80101		GASKET(A)	1
25	F80126		FACE PLATE GASKET(B)	1
26	FJ65		SCREW 11/64-40 L=14	2
27	FJ65		SCREW 11/64-40 L=9	1
28	F80120		RUBBER PLUG	2
29	F80109		TOP COVER	1
30	F80142		WORM GEAR SHAFT METAL	1
31	F80141		CAM DRIVING SHAFT METAL	1
32	FJ65		SCREW 3/16-28 L=6	4
33	F80108		TOP COVER GASKET.FRONT	1
34	F80106		OIL FELT	2
35	F80107		OIL FELT RETAINER	1
36	FJ65		SCREW 11/64-40 L=18	6
37	D8.13-29		RUBBER PLUG	6
38	F80112		GEAR CASE COVER	1
39	D8.19-4		DISK SPRING	2
40	F80114		HINGE SCREW	1
41	FJ67		SCREW 11/64-40 L=12.8	1
42	F80116		HAND STOP LATCH	1
43	FJ65		SCREW 11/64-40 L=7	2
44	F80117		BALL SCREW	1
45	FJ6170		NUT 3/16-28	1
46	F80118		RUBBER PLUG	1
47	F80110		TOP COVER GASKET, REAR	1
48	F80144		ARM OIL SHIELD	1
49	FJ65		SCREW 11/64-40 L=7	1
50	F80105		KNIFE STOP LEVER SHAFT GUIDE	1
51	D8.05-20		RUBBER PLUG	1
52	F80139		SIDE COVER (A) GASKET	1
53	F80138		SIDE COVER (A)	1
54	FJ65		SCREW 11/64-40 L=9	7
55	F80143		OIL SIGHT WINDOW GASKET	1
56	F801130		SIDE COVER ASM. B	1
57	FJ65		SCREW 11/64-40 L=9	4
58	FJ80146		SIDE COVER A	1
59	FJ65		SCREW 11/64-40 L=14	2
60	F80131		WASHER	2
61	F80133		CUSHION	2
62	F80148		BED SLIDE	1
63	F80132		BED SCREW STUD	2
64	F801360		BED OIL SHIELD	1
65	F80134		LOOPER COVER OIL SHIELD STUD	1
66	FJ65		SCREW 11/64-40 L=5	1
67	F801030		MACHINE HEAD ASM.	1
68	F80149		CUSHION	2
69	F80128		BASE HINGE	2
70	D8.01-38		MARK	1
71	F801132		OIL WINDOW	1
72	F8FA03		HINGE	1

2.

MACHINE BASE COMPONENTS

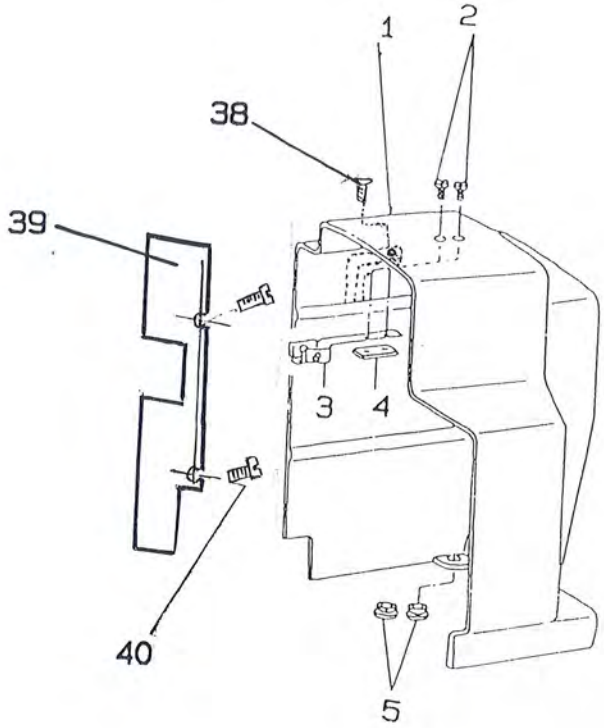

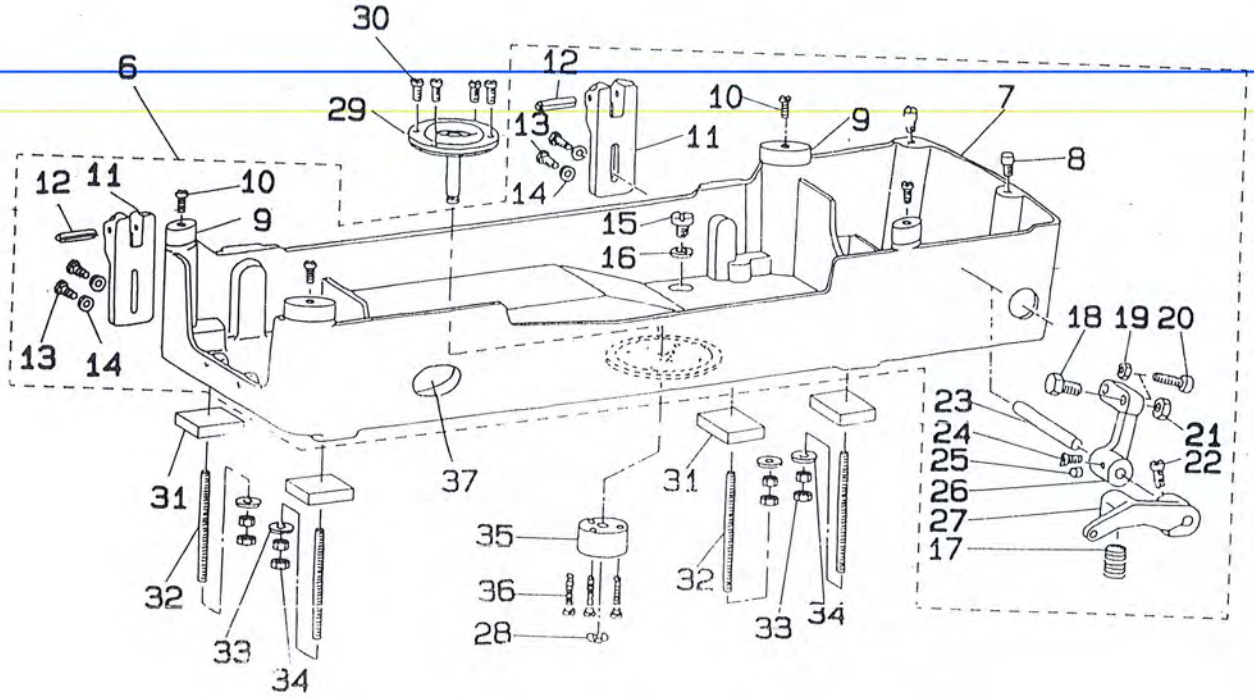

3..

MAIN SHAFT COMPONENTS

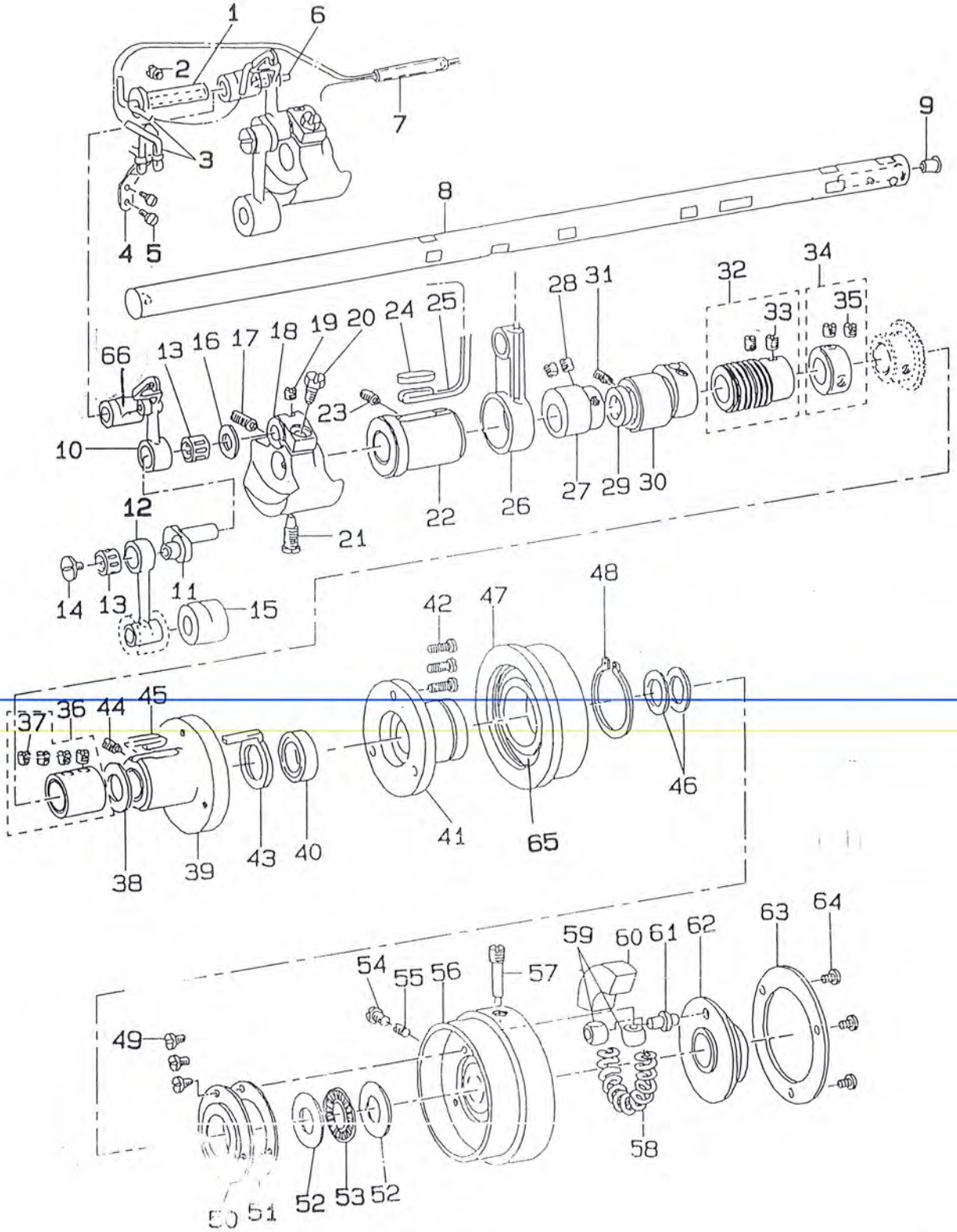

			Description	Qty
1	F80211		BELT GUARD	1
2	FJ65		SCREW 11/64-40 L=8.5	2
3	SJ08A.2-6		BELT GUARD SET SCREW	1
4	FJ80210		BOTTOM GUIDE	1
5	SJ08A.2-3		RUBBER BUSHING	2
6			MACHINE BASE ASM.	1
7	F80201		HEAD BASE	(1)
8	F80213		GUIDE PIN	(2)
9	SJ2-32		RUBBER CUSHION	(4)
10	FJ65		SCREW 11/64-40 L=10.5	(4)
11	F80203		HINGE HOLDER	(2)
12	GB879-86		PIN	(2)
13	FJ29.1		SCREW 15/64-28 L=20.5	(4)
14	F80204		WASHER	(4)
15	FJ65		SCREW 3/8-28 L=10	(1)
16	SJ08A.2-8		OIL DRAIN CAP GASKET	(1)
17	F80216		STARTING LEVER PRESSURE SPRING	(1)
18	F80208		SCREW	(1)
19	FJ6170		NUT 15/64-28	(1)
20	F802070		STOP SCREW ASM.	(1)
21	FJ6170		NUT 5/16-18	(1)
22	FJ65		SCREW 15/64-28 L=12	(1)
23	F80206		STARTING LINK SHAFT	(1)
24	F80205		BOLT	(1)
25	FJ74		SCREW 15/64-28 L=7	(1)
26	F80214		STARTING LINK	(1)
27	F80215		STARING LEVER	(1)
28	GB896-86		E-SHAPED SNAP RING	1
29	F802200		SHIFTER DRIVING PIN	1
30	FJ65		SCREW 11/64-40 L=8.5	4
31	FJ80217		MACHINE BASE FELT PAD	4
32	FJ73		SCREW 15/64-28 L=69	4
33	GB96-85		WASHER	4
34	FJ6170		NUT 15/64-28	8
35	F80221		DRIVING PIN BASE	1
36	FJ65		SCREW 11/64-40 L=24	3
37	SJ08A.2-13.1		OIL LEVEL WINDOW	1
38	FJ69		SCREW 11/64-40 L=7.5	1
39	F8FA01		SAFETY PLATE	1
40	FJ65		SCREW 11/64-40 L=5	2

			Description	Qty
1	F80320		HINGE STUD	1
2	FJ75		SCREW 15/64-28 L=10.5	1
3	FZ339-85		OIL WICK	1
4	F80323		OIL WICK HOLDER	1
5	FJ67		SCREW 9/64-40 L=4.6	2
6	F80321		OIL WICK SNAP RING	1
7	HG2-775-74		VINYL PIPE	1
8	F80302		MAIN SHAFT	1
9	D8.08-9		RUBBER PLUG	1
10	SJ08A.3-3		THREAD TAKE-UP LEVER ASM.	1
11	F80318		NEEDLE BAR CRANK	1
12	SJ08A.3-4		NEEDLE BAR CRANK CONNECTING ROD	1
13	GB5846-86		NEEDLE BEARING	2
14	D8.15-10		LEFT SCREW	1
15	F80332		OIL FELT WASHER	1
16	D8.02-1		NEDELE ROD CRANK WASHER	1
17	FJ75		SCREW 9/32-28 L=16	1
18	F80301		COUNTERWEIGHT	1
19	FJ74		SCREW 1/4-40 L=6	1
20	FJ29.1		SCREW 1/4-40 L=12	1
21	F80333		SCREW	1
22	F803030		BUSHING ,FRONT	1
23	FJ73		SCREW 15/64-28 L=7	2
24	F80304		OIL FELT	1
25	F80305		OIL WICK	1
26	F80307		KNIFE BAR DRIVING CONNECTING ROD	1
27	F80306		KNIFE BAR DRIVING ECCENTRIC	1
28	FJ73		SCREW 1/4-40 L=8	2
29	F803340		OIL SEAL	1
30	F80308		MAIN SHAFT BUSHING, INTERMEDIATE	1
31	FJ75		SCREW 15/64-28 L=10.5	1
32	F80309		WORM ASM.	1
33	FJ73		SCREW 1/4-40 L=6	(2)
34	F80310		THRUST COLLAR ASM.	1
35	FJ73		SCREW 1/4-40 L=4.5	(2)
36	F80311		MAIN SHAFT THRUST COLLAR ASM.	1
37	FJ73		SCREW 1/4-40 L=4.5	(4)
38	F80312		MAIN SHAFT THRUST WASHER	1
39	F803152		UPPER SHAFT REAR METAL	1
40	F803340		OIL SEAL	1
41	F803153		BEARING RETAINER	1
42	FJ67		SCREW 11/64-40 L=9	3
43	F80314		FELT	1
44	FJ73		SCREW 15/64-28 L=7	1
45	SJ08.17-9		OIL WICK	1
46	F80326		WASHER	2
47	F80316		LOOSE PULLEY ASM.	1
48	F80317		RETAINING RING	1
49	FJ67		SCREW 9/64-40 L=3.5	3
50	F80328		MAIN SHAFT THRUST SEEL	1
51	F80327		GASKET	1
52	GB4605-84		THRUST WASHER	2
53	GB4605-84		BEARING	1
54	FJ947		SCREW 1/4-40 L=5	1
55	FJ80		SCREW 1/4-40 L=5	1
56	F80329		DRIVING PULLEY	1
57	F80330		SCREW	1
58	SJ 08.3-28		STOP CAM PRESSURE SPRING	1
59	SJ 08.3-31		STOP-MOTION CAM PIN SLIDE BLOCK	2
60	SJ 08.3-29		BRAKELITE SEGMENT	1
61	F80331		STOP-MOTION CAM POSITION PIN	1
62	F80324		STOP-MOTION CAM	1
63	SJ08.3-33		STOP MOTION CAM PRESSER PLATE	1
64	FJ68		SCREW 11/64-40 L=7	3
65	GB276-89		BEARING	1
66	F80319		THREAD TAKE-UP CRANK LEVER ASM	1

4.

HOOK DRIVING SHAFT COMPONENTS

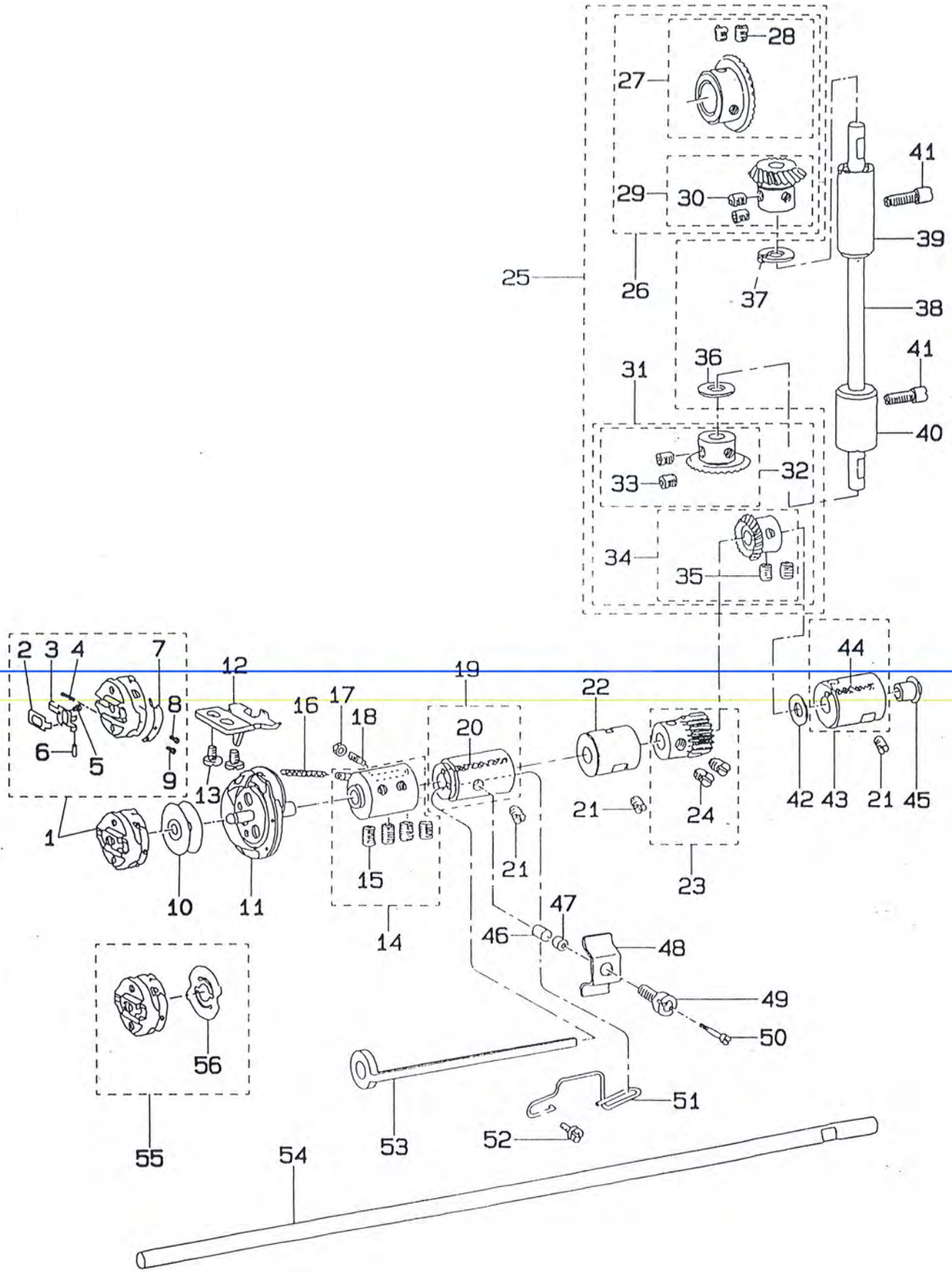

			Description	Qty
1			BOBBIN CASE ASM.	1
2			BOBBIN CASE LATCH LEVER	(1)
3			BOBBIN CASE LATCH	(1)
4			LATCH SPRING	(1)
5			LATCH STOP SCREW	(1)
6			HINGE PIN	(1)
7			TENSION SPRING	(1)
8			TENSION SCREW	(1)
9			CLAMP SCREW	(1)
10	F80426		BOBBIN	1
11			HOOK ASM.	1
12	F80401		BOBBIN CASE POSITIONING PLATE	1
13	FJ67		SCREW 11/64-40 L=5	2
14	F804030		HOOK SLEEVE ASM.	1
15	FJ80		SCREW 1/4-40 L=6.0	(4)
16	FZ339-85		OIL WICK	1
17	FJ6170		NUT 9/64-40	1
18	F80420		ADJUSTING SCREW	1
19	F80405		BUSHING ASM.,FRONT	1
20	FZ339-85		OIL WICK	(1)
21	FJ73		SCREW 15/64-28 L=7	3
22	F80407		BUSHING, INTERMEDIATE	1
23	F80408		PINION ASM.	1
24	FJ73		SCREW 1/4-40 L=6	(2)
25			GEAR & PINION ASM.	1
26			GEAR & PINION ASM. UPPER	(1)
27	SJ08.4-14A		GEAR ASM.	(1)
28	FJ70		SCREW 1/4-40 L=7.0	(2)
29	SJ08.4-17A		PINION ASM.	(1)
30	FJ70		SCREW 1/4-40 L=7.0	(2)
31			GEAR & PINION ASM. LOWER	(1)
32	SJ08.4-13A		GEAR ASM.	(1)
33	FJ70		SCREW 1/4-40 L=7.0	(2)
34	SJ08.4-10A		PINION ASM.	(1)
35	FJ70		SCREW 1/4-40 L=7.0	(2)
36	D8.02-1		WASHER	1
37	F80411		THRUST WASHER	1
38	F80419		UPRIGHT SHAFT	1
39	F804170		BUSHING, UPPER	1
40	F804160		BUSHING, LOWER	1
41	FJ67		SCREW 15/64-28 L=11.5	2
42	F80411		WASHER	1
43	F80412		BUSHING ASM., REAR	1
44	FZ339-85		OIL WICK	(1)
45	F80413		RUBBER PLUG	1
46	F804220		HOOK OIL SUPPLY RUBBER ASM.	1
47	F804221		BUSHING	1
48	F80424		PLATE SPRING	1
49	F80425		HOOK OIL ADJUSTING SCREW	1
50	F80423		POSITIONING SCREW	1
51	F80406		OIL SUPPLY FELT HOLDER	1
52	FJ67		SCREW 15/64-28 L=7	1
53	F80404		OIL SUPPLY FELT	1
54	F80409		HOOK DRIVING SHAFT	1
55			BOBBIN CASE ASM.	1
56			SPRING	(1)

5.

PRESSER BAR. WORK CLAMP CARRIER COMPONENTS

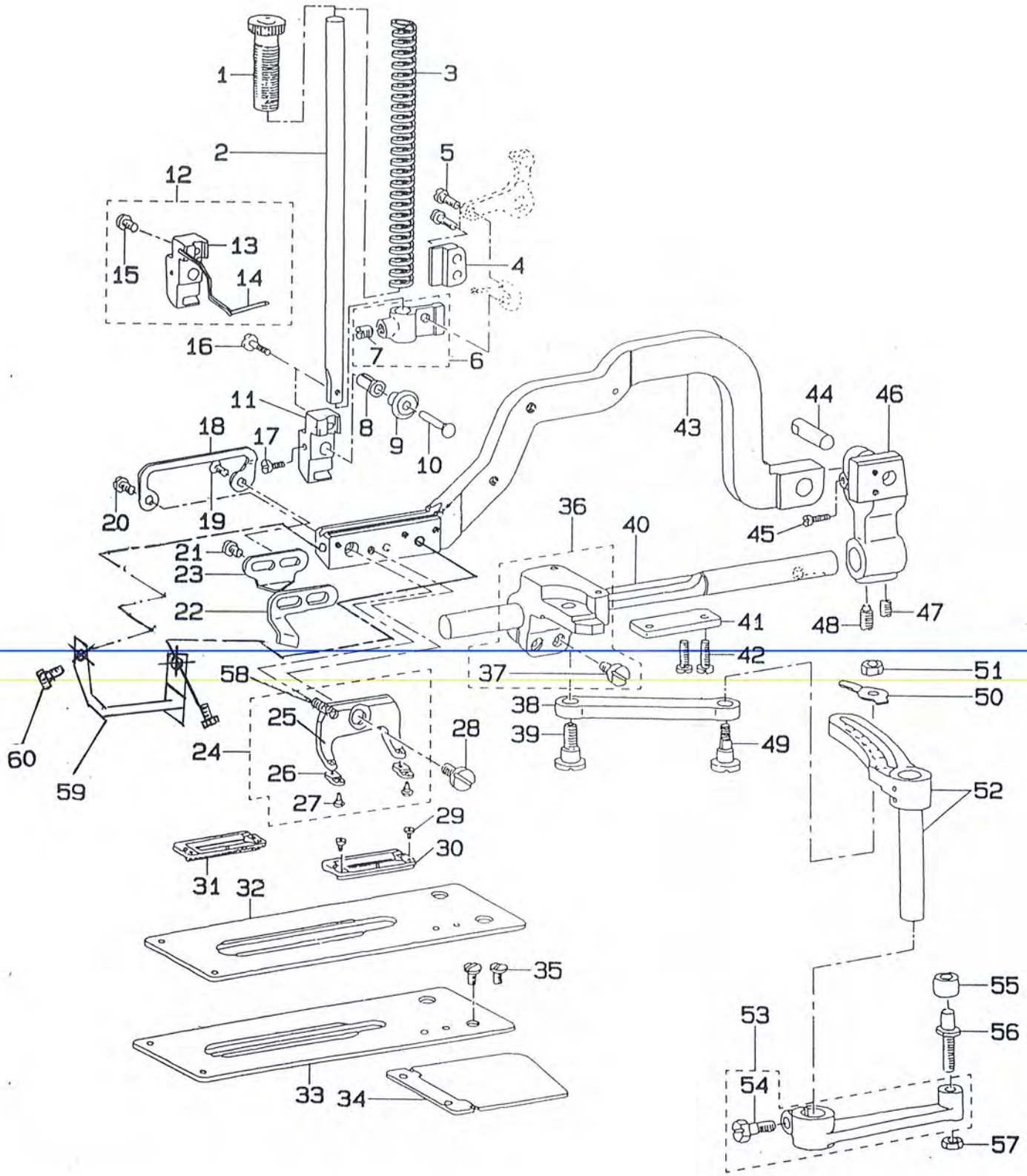

			Description	Qty
1	F80501		PRESSER SPRING REGULATOR	1
2	F80502		PRESSER BAR	1
3	F80503		PRESSER SPRING	1
4	F80536		PRESSER BAR GUIDE BRACKET	1
5	FJ65		SCREW 11/64-40 L=12.8	2
6	F80504		PRESSER BAR POSITION BRACKET	1
7	FJ74		SCREW 1/4-40 L=8	1
8	F80531		COLLAR	1
9	F80530		SLIDE ROLLER	1
10	F80529		CONNECTING PIN	1
11	F80528		BRACKET	1
12			BRACKET ASM.	1
13			BRACKET	(1)
14	F80505		FINGER GUARD	(1)
15	FJ65		SCREW 9/64-40 L=6.8	(1)
16	F80527		SCREW	1
17	FJ65		SCREW 11/64-40 L=7	1
18	F80535		WORK CLAMP BRACKET	1
19	FJ68		SCREW 11/64-40 L=9	1
20	FJ67		SCREW 11/64-40 L=8	1
21	FJ67		SCREW 11/64-40 L=8	1
22	F80526		NEEDLE THREAD TRIMMER GUIDE	1
23	SJ08.5-1		NEEDLE THREAD TRIMMER GUIDE	1
24	F805060C		WORK CLAMR CHECK HOLDER ASM.	1
25	F805063		WORK CLAMR CHECK HOLDER	(1)
26	F805061		WORK CLAMP CHECK SPRING	(2)
27	F805062		WORK CLAMP CHECK SPRING SET PIN	(2)
28	F80511		HINGE SCREW D=7.94 H=1.5	1
29	FJ65		SCREW 3/32-56 L=1.9	2
30	F805080C		WORK CLAMP CHECK	1
31	F80508CB		WORK CLAMP CHECK, KNIT GOOD	1
32	F80507AB		WORK CLAMP CARRIER	1
33	F80507A		WORK CLAMP CARRIER	1
34	F805320		BRACKET COVER	1
35	F0533		SCREW	2
36	F80521		WORK CLAMP ARM BRACKET ASM.	1
37	FJ65		SCREW 15/64-28 L=14	(2)
38	F80514		WORK CLAMP CARRIER BRACKET PIT	1
39	F80512		HINGE SCREW D=8.73 H=6.0	1
40	F80510		WORK CLAMP ARM SLIDE ROD	1
41	F80524		WORK CLAMP CARRIER BRACKET GUIDE	1
42	FJ65		SCREW 11/64-40 L=9.5	2
43	F80534		WORK CLAMP ARM	1
44	F80520		CONNECTING PIN	1
45	FJ65		SCREW 9/64-40 L=8.5	1
46	F80519		BEARING ARM	1
47	FJ74		SCREW 15/64-28 L=7	1
48	F80518		SET-SCREW	1
49	F80517		LENGTH REGULATING HINGE STUD	1
50	F80516D		LENGTH REGULATING SHAFT GUIDE	1
51	FJ6170		NUT 15/64-28	1
52	F805150		LENGTH REGULATING SCALE ASM.	1
53	F80513		LENGTH REGULATING SHAFT CRANK	1
54	FJ29.1		SCREW 15/64-28 L=15.5	(1)
55	F80522		ROLLER	1
56	F80523		BELL CRANK ROLLER STUD	1
57	FJ6170		NUT 15/64-28	1
58	F80509		WORK CLAMP CHECK HOLDER SPRING	(1)
59	F8FA02		FINGER GUARD	1
60	FJ65		SCREW 11/64-40 L=5	2

6.

NEEDLE BAR FRAME COMPONENTS

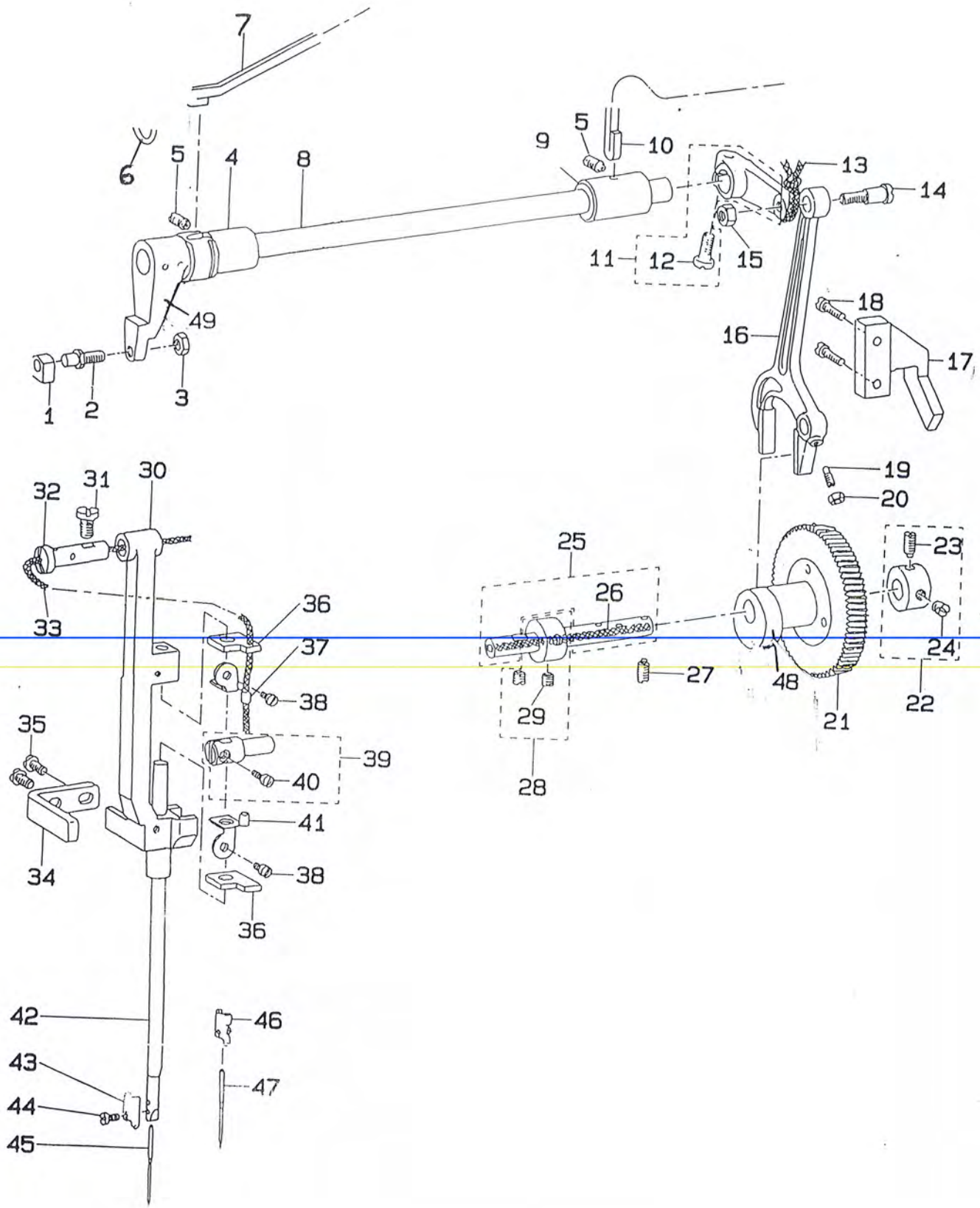

			Description	Qty
1	F80622		SQUARE BLOCK	1
2	F80623		STUD	1
3	FJ6170		NUT 15/64-28	1
4	F80626		BUSHING	1
5	FJ75		SCREW 15/64-28 L=10.5	2
6	GB1235-76		RUBBER RING	1
7	F80625		OIL WICK	1
8	F80612		FRAME ROCK SHAFT CRANK ASM. ,F	1
9	F80610		BUSHING,REAR	1
10	F80611		OIL FELT	1
11	F80603		FRAME ROCK SHAFT CRANK ASM. ,R	1
12	FJ67		SCREW 15/64-28 L=12	(1)
13	FZ339-85		OIL WICK	1
14	F80609		HINGE SCREW	1
15	FJ6170		NUT 1/4-24	1
16	F80602		NEEDLE BAR PITMAN	1
17	F80608		ROCK SHAFT CONNECTION GUIDE	1
18	FJ67		SCREW 11/64-40 L=16.0	2
19	F80704		SCREW	1
20	FJ6170		NUT 11/64-40	1
21	F80605		NEEDLE DRIVING GEAR ASM.	1
22	F80607		THRUST COLLAR ASM.	1
23	F80604		SET-SCREW	(1)
24	FJ74		SCREW 15/64-28 L=7	(1)
25	F80606		KNIFE DRIVING SHAFT ASM.	1
26	FZ339-85		OIL WICK	(1)
27	F80604		SET-SCREW	1
28	F80607		THRUST COLLAR ASM.	1
29	FJ74		SCREW 15/64-28 L=7	(2)
30	F80614		NEEDLE BAR FRAME	1
31	FJ67		SCREW 15/64-28 L=11	1
32	F80613		HINGE STUD	1
33	FZ339-85		OIL WICK	1
34	F80621		POSITION BARACKET	1
35	FJ947		SCREW 11/64-40 L=8	2
36	F80616		OIL FELT	2
37	F80615		ROCK SHAFT CONNECTION GUIDE	1
38	FJ67		SCREW 9/64-40 L=4.5	2
39	F80617		NEEDLE BAR CONNECTION	1
40	FJ67		SCREW 9/64-40 L=8.5	(1)
41	F80618		OIL FELT RETAINER, LOWER	1
42	F80619		NEEDLE BAR	1
43	F80620		NEEDLE BAR BOBBIN THREAD GUIDE	1
44	FJ67		SCREW 1/8-44 L=4.5	1
45			NEEDLE DPX5#11J	1
46			NEEDLE BAR THREAD GUIDE	1
47			NEEDLE 134SES 75	1
48	F80601		NEEDLE DRIVING CAM	
49	F80624		FRAME ROCK SHAFT FRONT CRANK	

7.

OVEREDGING WIDTH ADJUSTING COMPONENTS

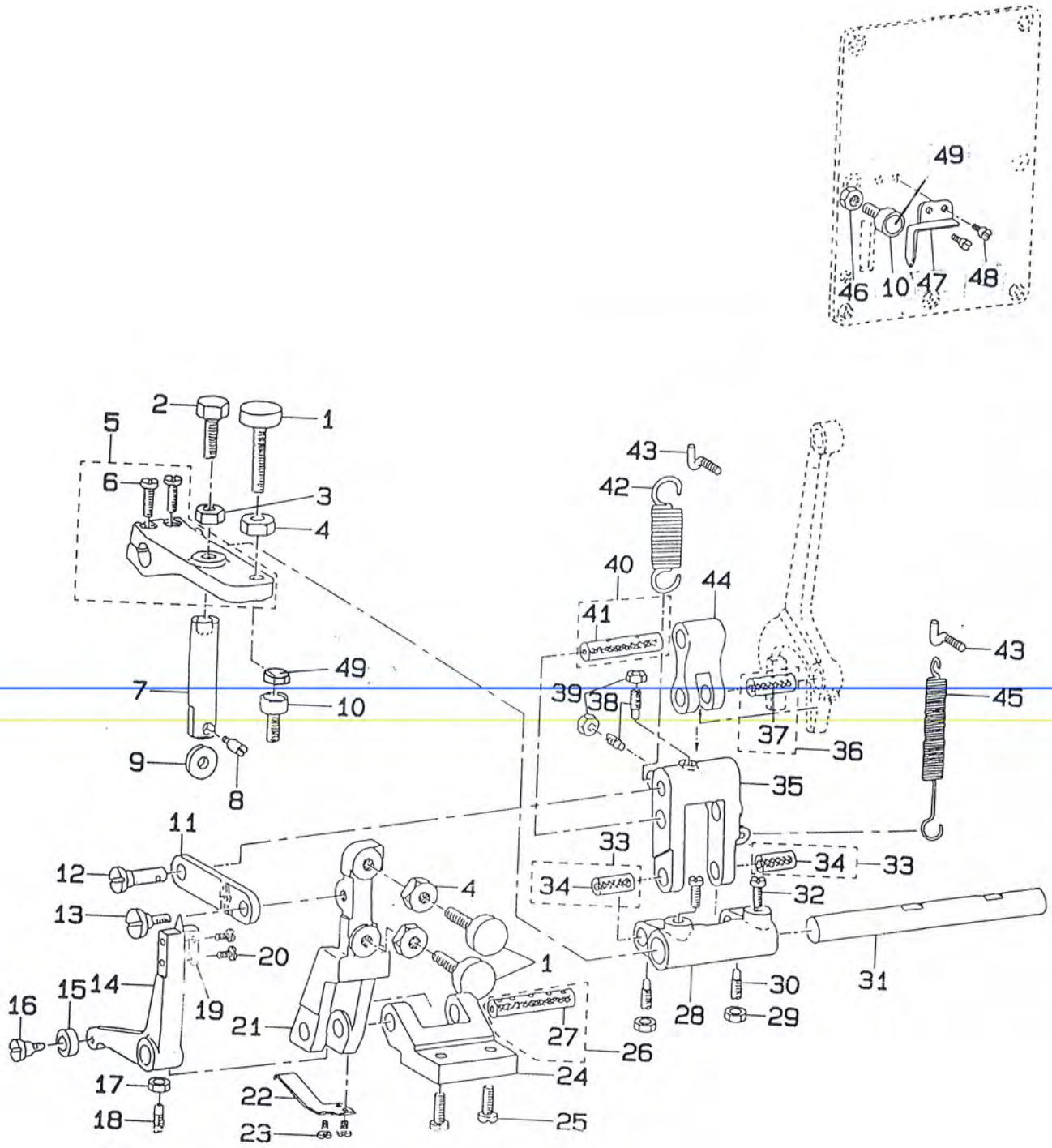

			Description	Qty
1	F80720		STITCH WIDTH REGULATING SCREW	3
2	F80208		SCREW	1
3	FJ6170		NUT 5/16-18	1
4	FJ6170		NUT 5/16-18	3
5	F80710		REPOSITIONING LEVER ASM.	1
6	FJ65		SCREW 3/16-28 L=12	(2)
7	F80729		TRIPPING ROD ASM.	1
8	F80728		PIN	1
9	F80726		ROLLER	1
10	F80727		REGULATING LEVER STOPPER ASM.	2
11	F80703		REGULATING LEVER CONNECTION	1
12	F80721		REGULATING HINGE PIN	1
13	F80722		HINGE SCREW	1
14	F80714		BELL CRANK	1
15	F80711		ROLLER	1
16	F80712		HINGE SCREW	1
17	FJ6170		NUT 11/64-40	1
18	F80704		SCREW	1
19	F80723		BARRED WIDTH INDICATOR	1
20	FJ67		SCREW 1/8-44 L=4.5	2
21	F80713		REGULATING LEVER	1
22	F80715		SPRING	1
23	FJ67		SCREW 1/8-44 L=4.5	2
24	F80716		REGULATING LEVER BRACKET	1
25	FJ67		SCREW 15/64-28 L=12	2
26	F80724		REGULATING LEVER SHAFT ASM.	1
27	FZ339-85		OIL WICK	(1)
28	F80709		BEARING BRACKET	1
29	FJ6170		NUT 11/64-40	2
30	F80704		SCREW	2
31	F80719		NEEDLE THROW REPOSITIONING SHAFT	1
32	FJ67		SCREW 15/64-28 L=9	2
33	F80718		BEARING BRACKET ASM.	2
34	FZ339-85		OIL WICK	(2)
35	F80708		REPOSITIONING LEVER LINK	1
36	F80707		CONNECTING FORKED LINK PIN ASM	1
37	FZ339-85		OIL WICK	(1)
38	F80704		SCREW	2
39	FJ6170		NUT 11/64-40	2
40	F80705		CONNECTING STUD ASM.	1
41	FZ339-85		OIL WICK	(1)
42	F80702		SPRING	1
43	F80701		SUSPENSION SCREW	2
44	F80706		CONNECTING FORKED LINK	1
45	F80717		SPRING	1
46	FJ6170		NUT 15/64-28	1
47	F80725		SEAM WIDTH INDICATOR	1
48	FJ67		SCREW 1/8-44 L=4.5	2
49	F80207 1/2		NYLON CUSHION	2

8.

NEEDLE THREAD TRIMMER COMPONENTS

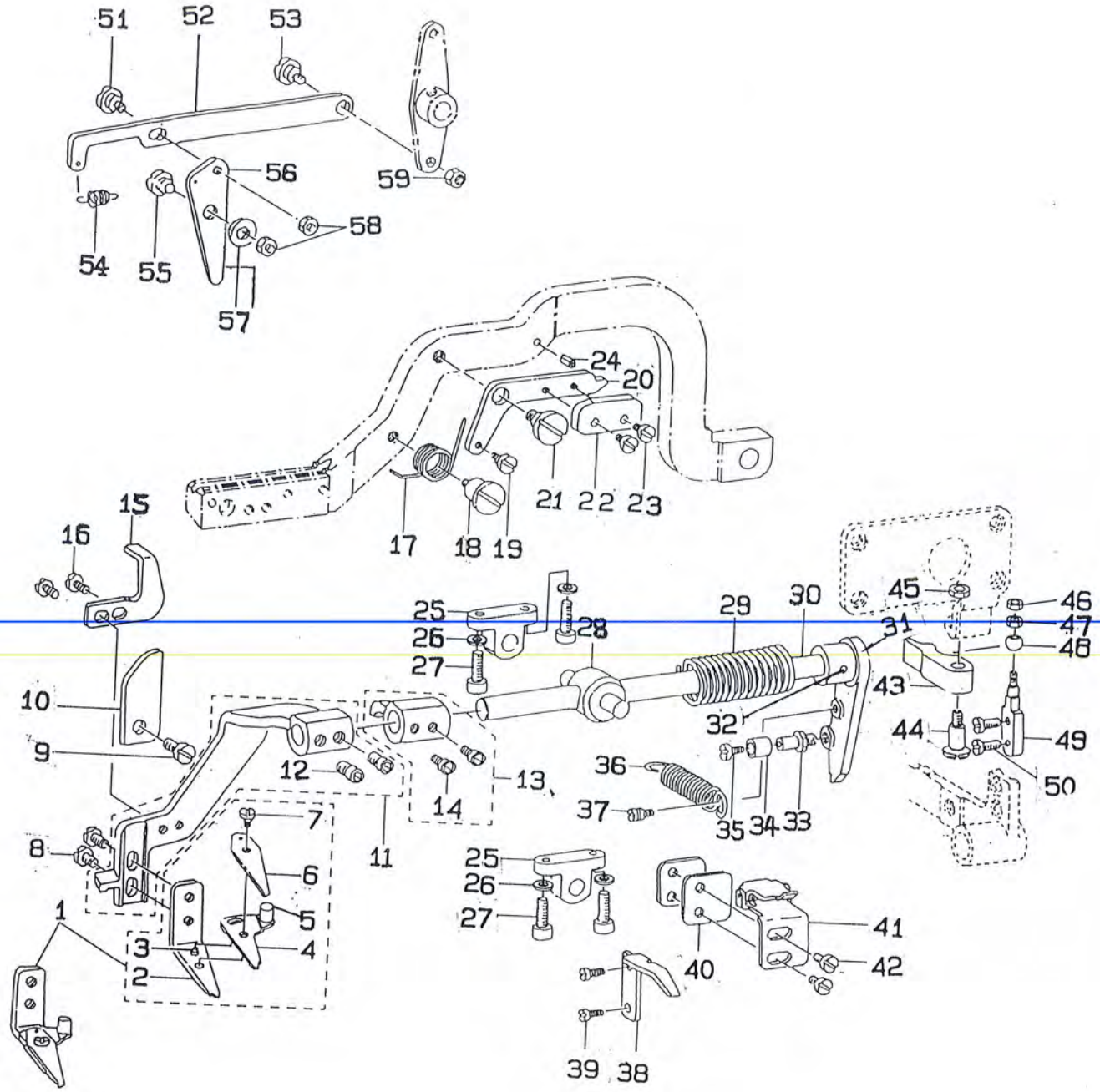

			Description	Qty
1	F808010		NEEDLE THREAD TRIMMER ASM.	1
2	F808011		NEEDLE THREAD TRIMMER, LOWER	(1)
3	SJ08.8-1.1-4		POSITION PIN	(1)
4	F808012		NEEDLE THREAD TRIMMER, UPPER	(1)
5	F808015		PIN	(1)
6	F808013		NEEDLE THREAD PRESSER SPRING	(1)
7	F808014		HINGE SCREW	(1)
8	FJ67		SCREW 11/64-40 L=5	2
9	FJ67		SCREW 15/64-28 L=7	1
10	F80820		NEEDLE THREAD TRIMMER SHAFT GUIDE	1
11	F808020		THREAD TRIMMER HOLDER ASM.	1
12	FJ70		SCREW 1/4-40 L=7.0	(2)
13	F80818		THREAD TRIMMER HOLDER ASM.	1
14	FJ70		SCREW 1/4-40 L=7.0	(2)
15	F80803		LIMITING PLATE	1
16	FJ67		SCREW 11/64-40 L=7.8	2
17	SJ08.5-13		DRIVING CAM SPRING	1
18	F80821		DRIVING CAM SPRING AXLE	1
19	F80822		HINGE SCREW	1
20	F80823		DRIVING CAM INSTALLING PLATE	1
21	F80819		HINGE SCREW	1
22	F80817		DRIVING CAM	1
23	FJ67		SCREW 9/64-40 L=6.8	2
24	GB879-86		SPRING PIN 3.0 X10	1
25	F80816		BRACKET	2
26	GB848-85		SPRING WASHER	4
27	FJ70		SCREW 3/16-32 L=12.0	4
28	F80815		UNIVERSAL JOINT	1
29	F80830		THREAD TRIMMER SPRING B	1
30	F80831		NEEDLE THREAD TRIMMER SHAFT	1
31	F80825		REAR CRANK	1
32	GB117-86		PIN	1
33	F80828		STUD	1
34	F80827		CAM ROLL	1
35	F80826		SCREW	1
36	F80814		THREAD TRIMMER SPRING A	1
37	F80829		SUSPENSION SCREW	1
38	F80809		LATCH PRESSER ARM	1
39	FJ67		SCREW 9/64-40 L=6.8	2
40	SJ08.8-25		SPACER	2
41	SJ08.8-13.3		LOCKING BRACKET LATCH ASM.	1
42	FJ67		SCREW 11/64-40 L=7.8	2
43	F80813		THREAD TRIMMING SHAFT SEGMENT	1
44	F80812		HINGE SCREW	1
45	FJ6170		NUT 11/64-40	1
46	FJ6170		NUT 1/8-44	1
47	FJ6170		NUT 1/8-44	1
48	F80811		ROLLER	1
49	F80810		STUD	1
50	FJ67		SCREW 11/64-40 L=7.8	2
51	F80806		HINGE SCREW	1
52	F80805		BLOCKING LINK	1
53	D8.04-18		HINGE SCREW	1
54	SJ08.8-7		BLOCKING ARM SPRING	1
55	F80808		HINGE SCREW	1
56	F80804		BLOCKING ARM	1
57	F80807		BLOCKING ARM BRACKET	1
58	FJ6170		NUT 11/64-40	2
59	FJ6170		NUT 3/16-28	1

9.

BOBBIN THREAD TRIMMER COMPONENTS

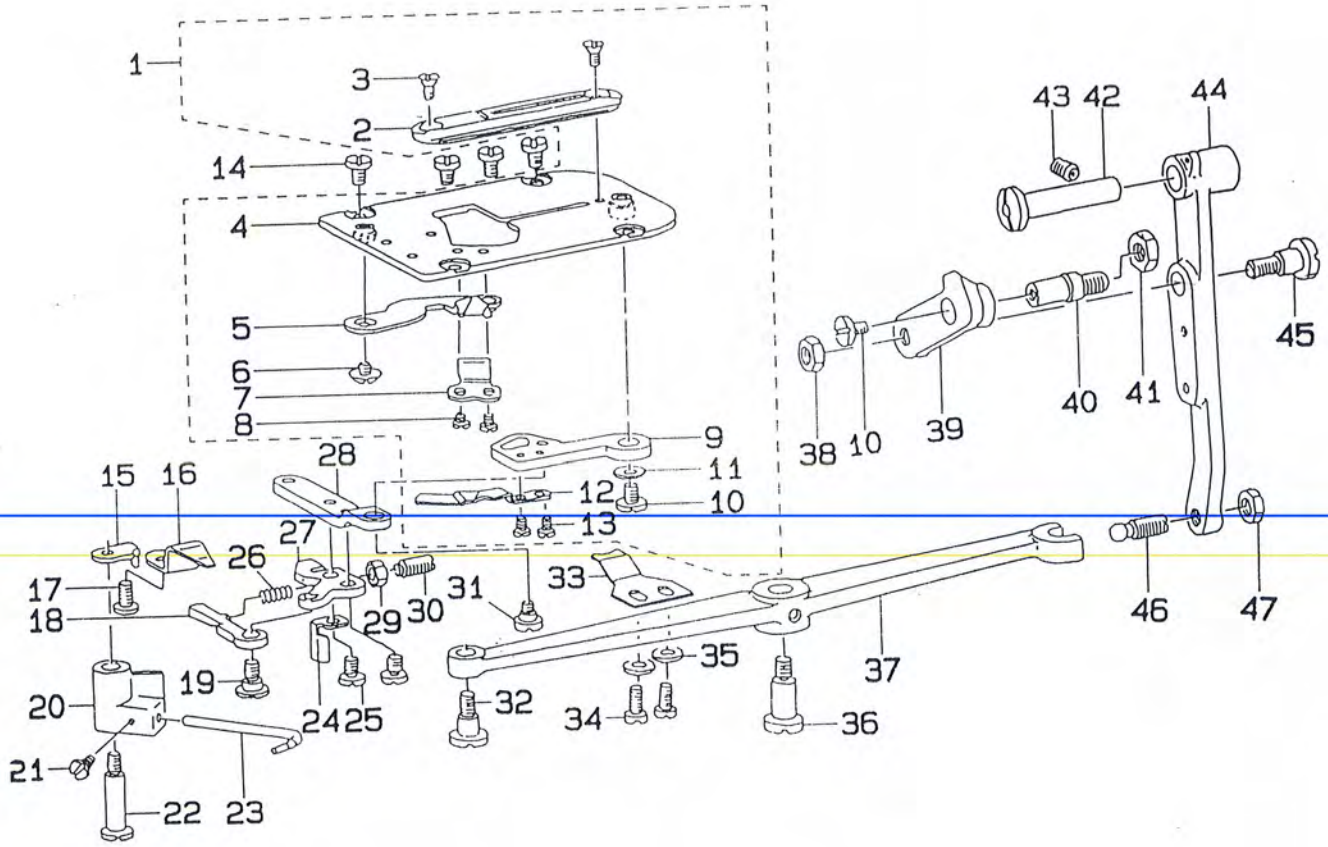

			Description	Qty
1			NEEDLE PLATE ASM.	1
2	F80907		NEEDLE PLATE	(1)
3	FJ69		SCREW 9/64-40 L=4.5	(2)
4	F809120		THROAT PLATE BASE ASM.	(1)
5	F809090		BOBBIN THREAD TRIMMER BLADE ASM.	(1)
6	F80906		SCREW	(1)
7	F80911		COUNTER KNIFE	(1)
8	FJ67		SCREW 1/8-44 L=3	(2)
9	F80913		BOBBIN THREAD TRIMMER LEVER	(1)
10	F80914		SCREW	(2)
11	SJ08.9-13		WASHER	(1)
12	F80910		BOBBIN THREAD PULLER	(1)
13	FJ67		SCREW 9/64-40 L=4.0	(2)
14	FJ67		SCREW 9/64-40 L=6	4
15	F80905		HOOK THREAD PRESSER STOPPER	1
16	F80917		PRESSER PLATE	1
17	FJ67		SCREW 11/64-40 L=7.8	1
18	F80931		BCBBIN PICKER PRESSER PLATE	1
19	F80908		HINGE SCREW	1
20	F80904		BOBBING PICKER BRACKET	1
21	FJ67		SCREW 9/64-40 L=6	1
22	F80903		BOBBIN PICKER BRACKET SHAFT	1
23	F80902		BOBBIN WINDER TRIP LATCH	1
24	F80932		SAFETY STOPPER	1
25	FJ67		SCREW 11/64-40 L=6	2
26	F80930		PRESSER PLATE ADJUSTING SPRING	1
27	F80901		RPESSER PLATE MOUNTING BASE	1
28	F80920		BOBBIN THREAD TRIMMER LINK	1
29	FJ6170		NUT 3/16-28	1
30	FJ75		PRESSER PLATE ADJUSTING SCREW	1
31	F80921		HINGE SCREW	1
32	F80929		HINGE SCREW	1
33	F80916		BOBBIN THREAD GUIDE	1
34	FJ67		SCREW 9/64-40 L=5.0	2
35	GB848-85		WASHER	2
36	F80928		HINGE SCREW	1
37	F80924		BOBBIN THREAD TRIMMER DRIVING	1
38	FJ6170		NUT 15/64-28	1
39	F80922		CONNECTING LINK	1
40	F80919		STOP SCREW	1
41	FJ6170		NUT 9/32-28	1
42	F80925		HING STUD	1
43	FJ73		SCREW 15/64-28 L=7	1
44	F80926		BOBBING THREAD TRIMMER DRIVIHG	1
45	F80927		HINGE SCREW	1
46	F80923		BALL SCREW	1
47	FJ6170		NUT 15/64-28	1

10.

KNIFE BAR COMPONENTS

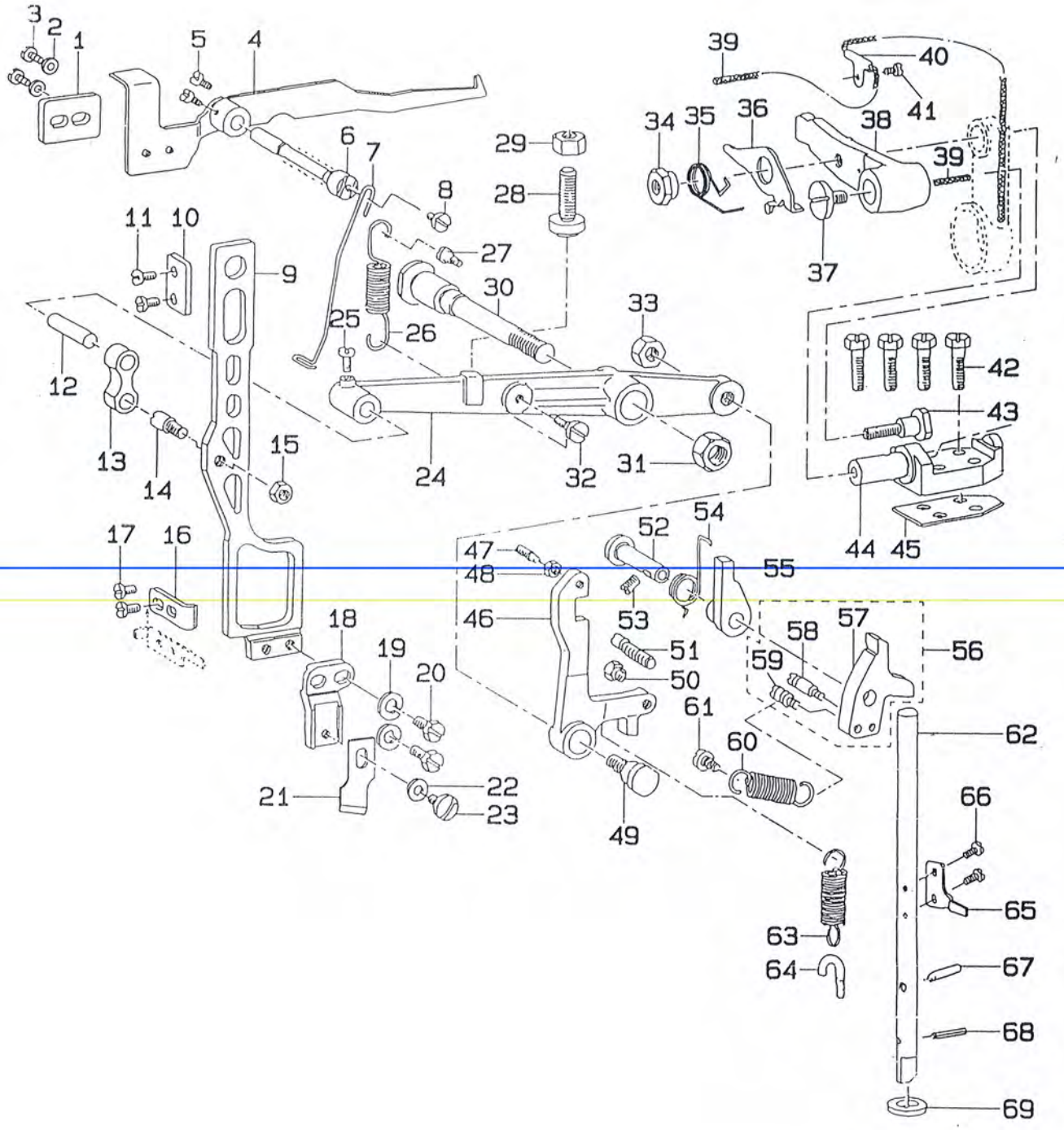

			Description	Qty
1	F81006		KNIFE STOP LEVER BRACKET	1
2	GB848-85		WASHER	2
3	FJ67		SCREW 11/64-40 L=7	2
4	F810090		KNIFE STOP LEVER	1
5	FJ65		SCREW 11/64-40 L=5	2
6	F81038		KNIFE STOP LEVER HINGE STUD	1
7	F81016		THREAD CHECK WIRE	1
8	FJ67		SCREW 11/64-40 L=7.8	1
9	F81003		KNIFE BAR	1
10	F81020		KNIFE ROD GUIDE PLATE	1
11	FJ67		SCREW 11/64-40 L=7.8	2
12	F81024		HINGE STUD	1
13	F81004		KNIFE BAR CONNECTING LINK	1
14	F81017		HINGE SCREW	1
15	FJ6170		NUT 1/4-40	1
16	F81027		KNIFE BAR POSITION BARACET	1
17	FJ67		SCREW 11/64-40 L=7	2
18	F81002		KNIFE HOLDER	1
19	GB93		SPRING WASHER	2
20	FJ29.1		SCREW 1/4-40 L=12	2
21	F81001S		KNIFE 1-1/4"	1
22	GB97.1-85		WASHER	1
23	F81030		SCREW	1
24	F81037		KNIFE BAR DRIVING LEVER	1
25	F81005		SCREW	1
26	F81008		SPRING	1
27	F81007		HINGE SCREW	1
28	F810230		KNIFE BAR DRIVING LEVER ASM.	1
29	FJ6170		NUT 5/16-18	1
30	F81039		KNIFE BAR DRIVING LEVER SHAFT	1
31	FJ6170		NUT 3/8-28	1
32	F81046		HINGE SCREW	1
33	FJ6170		NUT 5/16-24	1
34	F81040		KNIFE BAR DRIVING CRANK NUT	1
35	F81019		TENSION SPRING	1
36	F81021		LATCH	1
37	F81041		SCREW	1
38	F81018		KNIFE BAR DRIVING CRANK	1
39	FZ339-85		OIL WICK	1
40	F81042		OIL WICK HOLDER	1
41	FJ67		SCREW 9/64-40 L=6	1
42	FJ29.1		SCREW 15/64-28 L=20.5	4
43	F81043		HINGE SCREW	1
44	F81011		KNIFE BAR DRIVING CRANK SHAFT	1
45	F81013		SPACER	1
46	F81010		KNIFE BAR DRIVING LEVER BELL	1
47	F81022		SCREW	1
48	FJ6170		NUT 11/64-40	1
49	F81043		HINGE SCREW	1
50	F81044		NUT	1
51	F81045		PIN	1
52	F80925		HING STUD	1
53	FJ74		SCREW 15/64-28 L=7	1
54	F81014		TENSION SPRING	1
55	F81012		RATCHET PAWL(B)	1
56			HOOK DIFFERENTIAL CLICK A ASM.	1
57	F81015		HOOK DIFFERENTIAL CLICK A	(1)
58	F81033		SPRING SUSPENSION	(1)
59	D8.11-32		THREAD CUTTING LINK SPRING RAC	(1)
60	F81035		TENSION SPRING	1
61	D8.05-5		HINGE SCREW	1
62	F81028		DRIVING ROD	1
63	F81025		TENSION SPRING	1
64	F81026		SUSPENSION SCREW	1
65	F81031		FINGER	1
66	FJ65		SCREW 9/64-40 L=6.8	2
67	GB119-86		POSITIONING PIN(B)	1
68	GB879-86		SPRING PIN 3X20	1
69	F81029		THRUST WASHER	1

11.

FEED CAM & TRIPPING SEGMENT COMPONENTS

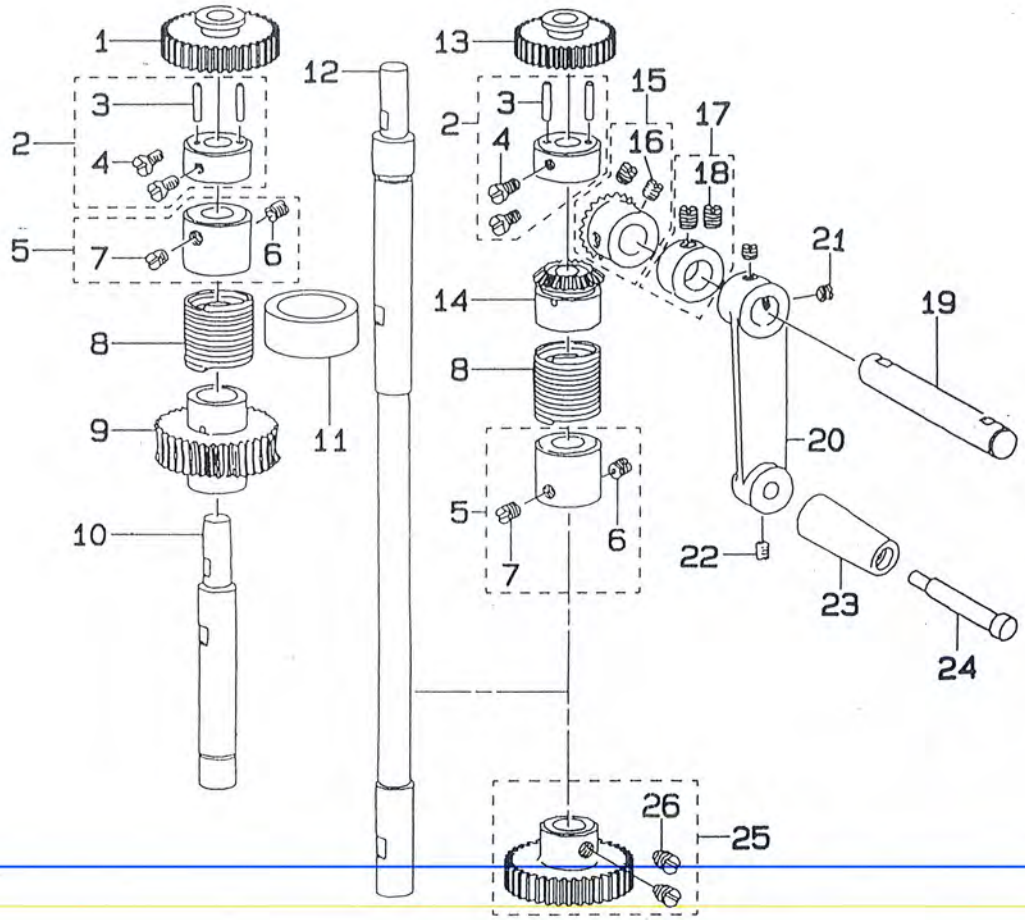

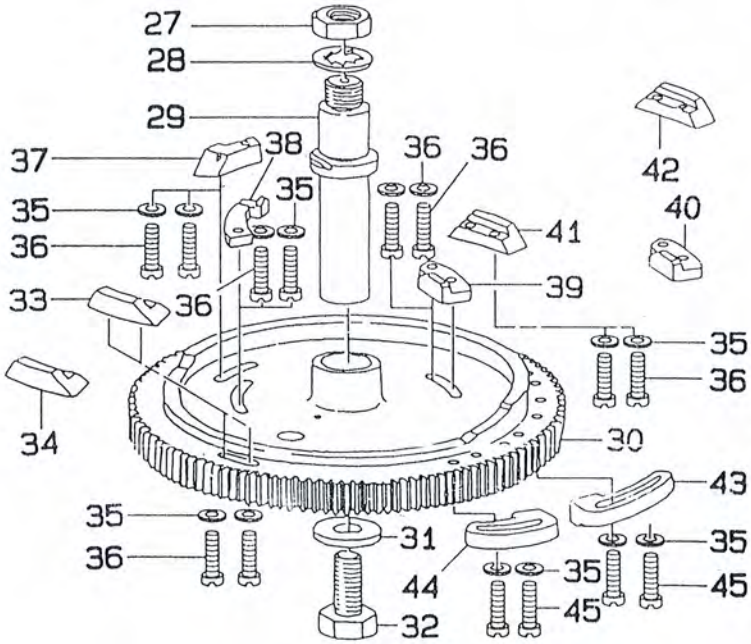

			Description	Qty
1	F811281I(88)		SPUR GEAR (88)	1
2	F811030		SPUR GEAR BUSHING ASM.	2
3	F811032		SPUR GEAR BUSHING PIN	(4)
4	FJ67		SCREW 3/16-28 L=9	(4)
5	F81104		CLUTCH COLLAR ASM.	2
6	FJ74		SCREW 1/4-40 L=6	(2)
7	FJ74		SCREW 1/4-40 L=4.2	(2)
8	F81106		CLUTCH SPRING	2
9	F81107		FEED CAM DRIVING WORM WHEEL	1
10	F81108		FEED CAM DRIVING WORM WHEEL SH	1
11	F81105		OIL FELT	1
12	F81120		FEED CAM DRIVING SHAFT	1
13	F811291I(212)		SPUR GEAR (212)	1
14	F81121		HANDLE CRANK BEVEL GEAR, LEFT	1
15	F81122		HANDLE CRANK BEVEL GEAR ASM.	1
16	FJ74		SCREW 1/4-40 L=6	(2)
17	F81123		THRUST COLLAR ASM.	1
18	FJ74		SCREW 1/4-40 L=4.5	(2)
19	F81124		HANDLE CRANK SHAFT	1
20	F81125		HANDLE CRANK	1
21	FJ74		SCREW 15/64-28 L=4.7	2
22	FJ74		SCREW 3/16-32 L=6	1
23	F81127		HANDLE SHAFT	1
24	F81126		HANDLE SHAFT	1
25	F81119		FEED CAM DRIVING GEAR ASM.	1
26	FJ74		SCREW 1/4-40 L=6	(2)
27	F81109		NUT	1
28	F81110		THRUST WASHER	1
29	F81111		FEED CAM SHAFT	1
30	F81112		FEED CAM	1
31	F81113		WASHER	1
32	F81114		SCREW	1
33	F81118		BAR TRIPPING SEGMENT NO.1	1
34			BAR TRIPPING SEGMENT NO.2(B)	1
35	F81130		WASHER	14
36	FJ65		SCREW 11/64-40 L=16	10
37	F81115		KNIFE TRIPPING SEGMENT	1
38	F81116		TENSION RELEASE TRIPING SEGME.	1
39	F81117		TENSION RELEASE TRIPPING SEGME.	1
40			TRIPPING SEGMENT NO.2,UNDER 80	1
41	F81118		BAR TRIPPING SEGMENT NO.1	1
42			BAR TRIPPING SEGMENT NO.2(B)	1
43	F81102		LOW-SPEED CAM	1
44	F81101		STOPPER CAM	1
45	FJ67		SCREW 11/64-40 L=14	4

12.
STOP-MOTION COMPONENTS

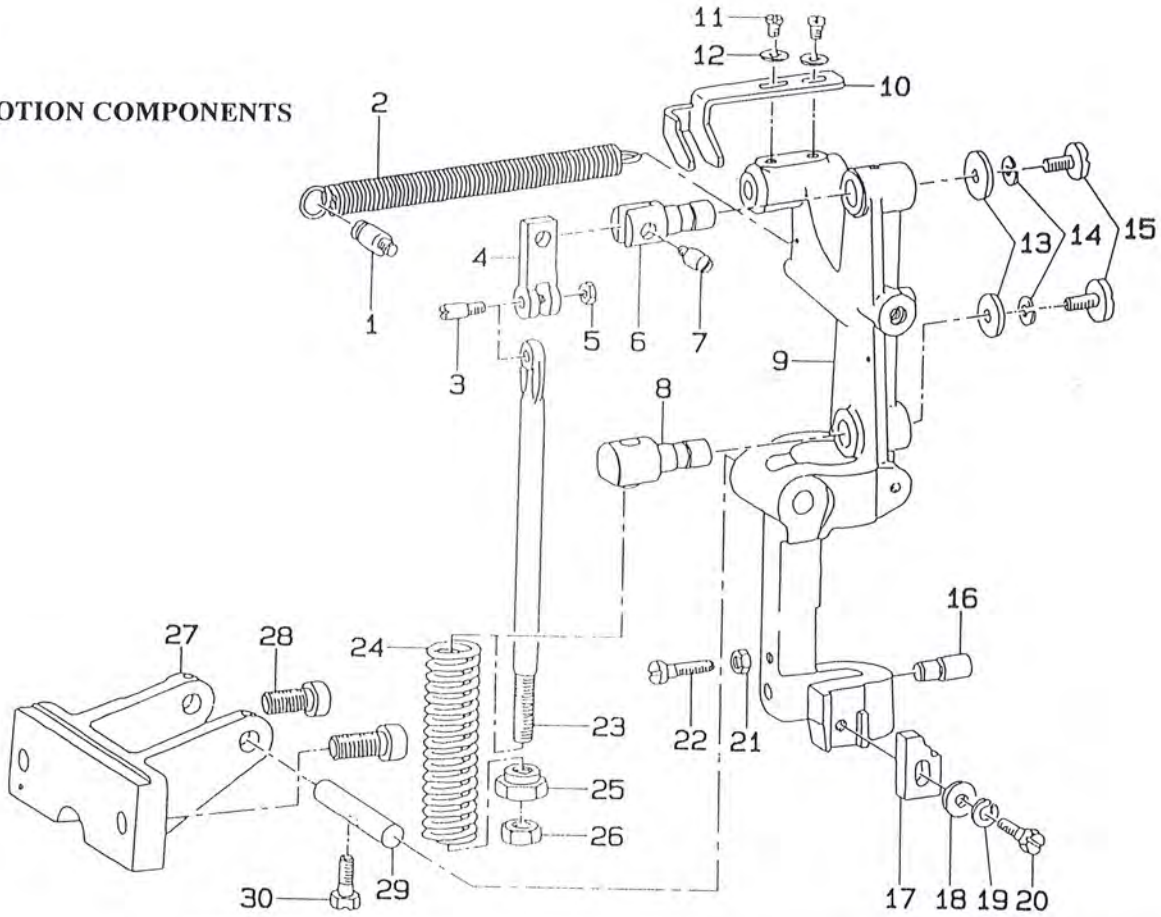

			Description	Qty
1	F81213		SUSPENSION SCREW	1
2	F81212		TENSION SPRING	1
3	F81202		STOP LINK ROD HINGE SCREW	1
4	F81215		STOP LINK	1
5	FJ6170		NUT 3/16-32	1
6	F81201		STOP LINK HINGE STUD	1
7	F81216		STOP LINK CONNECTING SCREW	1
8	F81204		STOP LINK ROD HINGE STUD	1
9	F81206		STOP MOTION LEVER	1
10	F81214		BELT SHIFTER	1
11	FJ67		SCREW 15/64-28 L=7	2
12	GB97.1-85		WASHER	2
13	GB96-85		WASHER	2
14	GB93-87		WASHER	2
15	F81205		SCREW	2
16	F81217		STOP PIN	1
17	F81209		LATCH	1
18	F81218		WASHER	1
19	GB93-87		WASHER	1
20	FJ29.1		SCREW 15/64-28 L=20.5	1
21	FJ6170		NUT 15/64-28	1
22	FJ67		SCREW 15/64-28 L=30	1
23	F81203		STOP LINK ROD	1
24	F81207		STOP LINK ROD PRESSURE SPRING	1
25	F81208		NUT FOR STOP LINK ROD	1
26	FJ6170		NUT 3/8-18	1
27	F81211		STOP MOTION LEVER BRACKET	1
28	FJ70		SCREW 3/8-18 L=22.0	2
29	F81210		PIN	1
30	FJ29.1		SCREW 15/64-28 L=15.5	1

13.

TRIPPING LEVER COMPONENTS

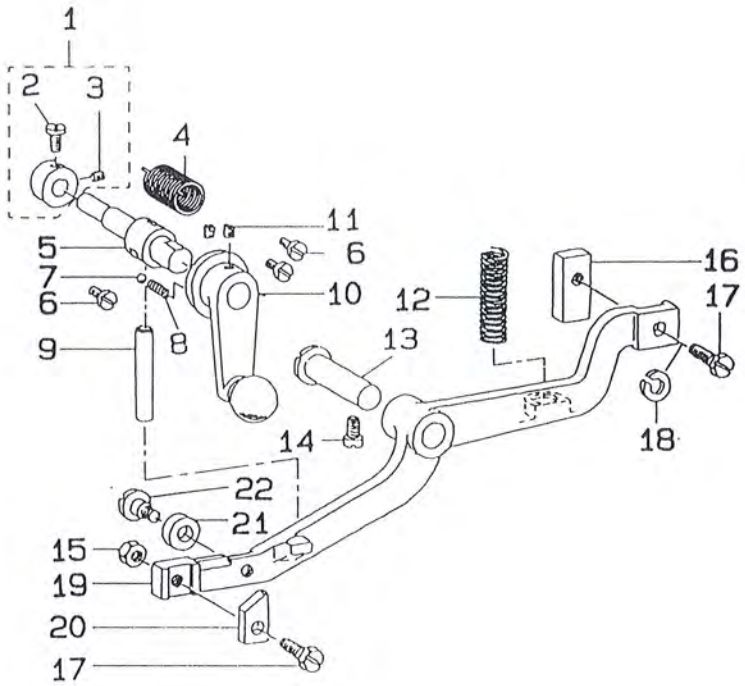

			Description	Qty
1	F81518		THRUST COLLAR ASM.	1
2	FJ67		SCREW 11/64-40 L=7	(1)
3	FJ74		SCREW 11/64-40 L=5	(1)
4	F81308		CRANK SHAFT TENSION SPRING	1
5	F81305		HAND STOP CRANK SHAFT	1
6	FJ65		SCREW 11/64-40 L=9.5	2
7	GB308-77		HAND STOP CRANK SHAFT BALL	1
8	F81304		CRANK SHAFT PRESSURE SPRING	1
9	F81309		HAND STOP ROD	1
10	F813030		HAND STOP CRANK ASM.	1
11	FJ74		SCREW 15/64-28 L=4.7	2
12	SJ13-332		TRIPPING LEVER TENSION SPRING	1
13	F81306		TRIPPING LEVER HINGE PIN	1
14	FJ67		SCREW 15/64-28 L=9	1
15	FJ6170		NUT 15/64-28	1
16	F81307		LATCH	1
17	FJ29.1		SCREW 15/64-28 L=20.5	2
18	GB93-87		SPRING WASHER	1
19	F81301		TRIPPING LEVER	1
20	F81302		TRIPPING DOG	1
21	F80711		ROLLER	1
22	F80712		HINGE SCREW	1

14.

LIFTING LEVER COMPONENTS

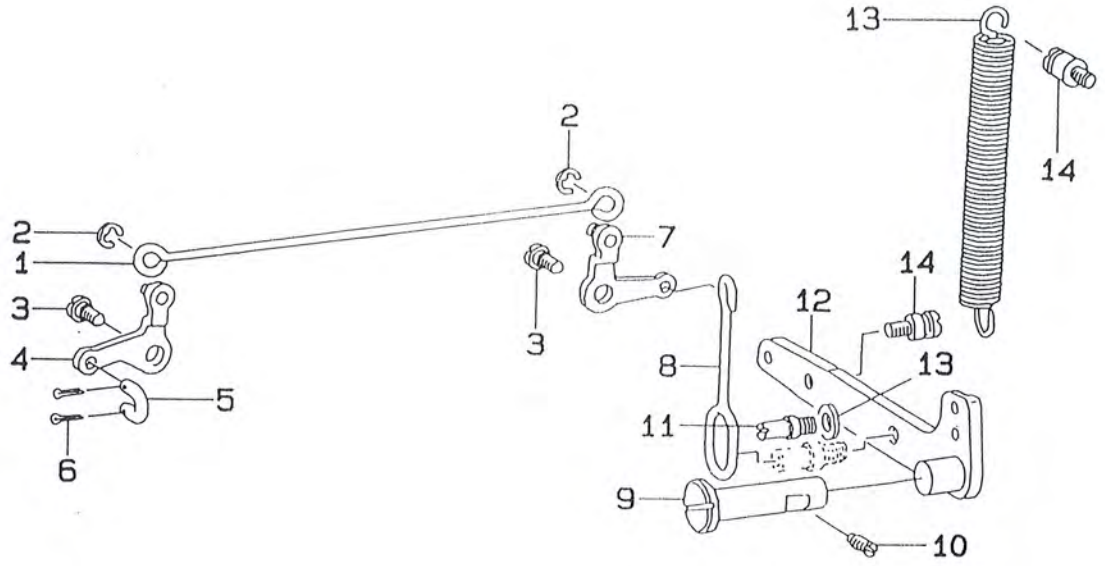

			Description	Qty
1	F81409		PESSER BAR LIFTING ROD,LONG	1
2	GB896-86		E-RING	2
3	D8.11-6		HINGE SCREW	2
4	F814030		LEVER ASM.FRONT	1
5	F81401		LINK	1
6	GB91-86		SPLIT PIN	2
7	F814080		LEVER ASM. REAR	1
8	F81407		PRESSER BAR LIFTING ROD	1
9	F81306		TRIPPING LEVER HINGE PIN	1
10	FJ75		SCREW 15/64-28 L=10.5	1
11	F81404		LIFTING LEVER STOPPER	1
12	F814060		PRESSER BAR LIFTING LEVER ASM.	1
13	SJ14-339		PRESSER FOOT LIFTING SPRING	1
14	F81213		SUSPENSION SCREW	2

15.

STARTING LINK COMPONENTS

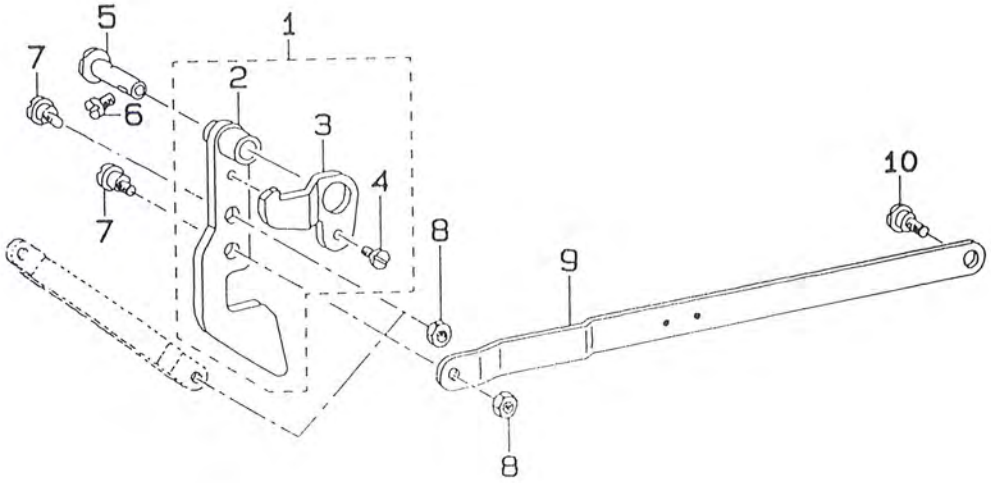

			Description	Qty
1			STARTING LINK COMPL.	1
2	F816030		STARTING LINK ASM.	(1)
3	F81605		SAFETY BASE	(1)
4	FJ67		SCREW 11/64-40 L=7	(1)
5	F80925		HINGE STUD	1
6	FJ67		SCREW 15/64-28 L=9	1
7	F81604		HINGE SCREW	2
8	FJ6170		NUT 15/64-28	2
9	F81602		STARTING LINK DRIVING ROD	1
10	F81601		HINGE SCREW	1

16.

THREAD TENSION COMPONENTS

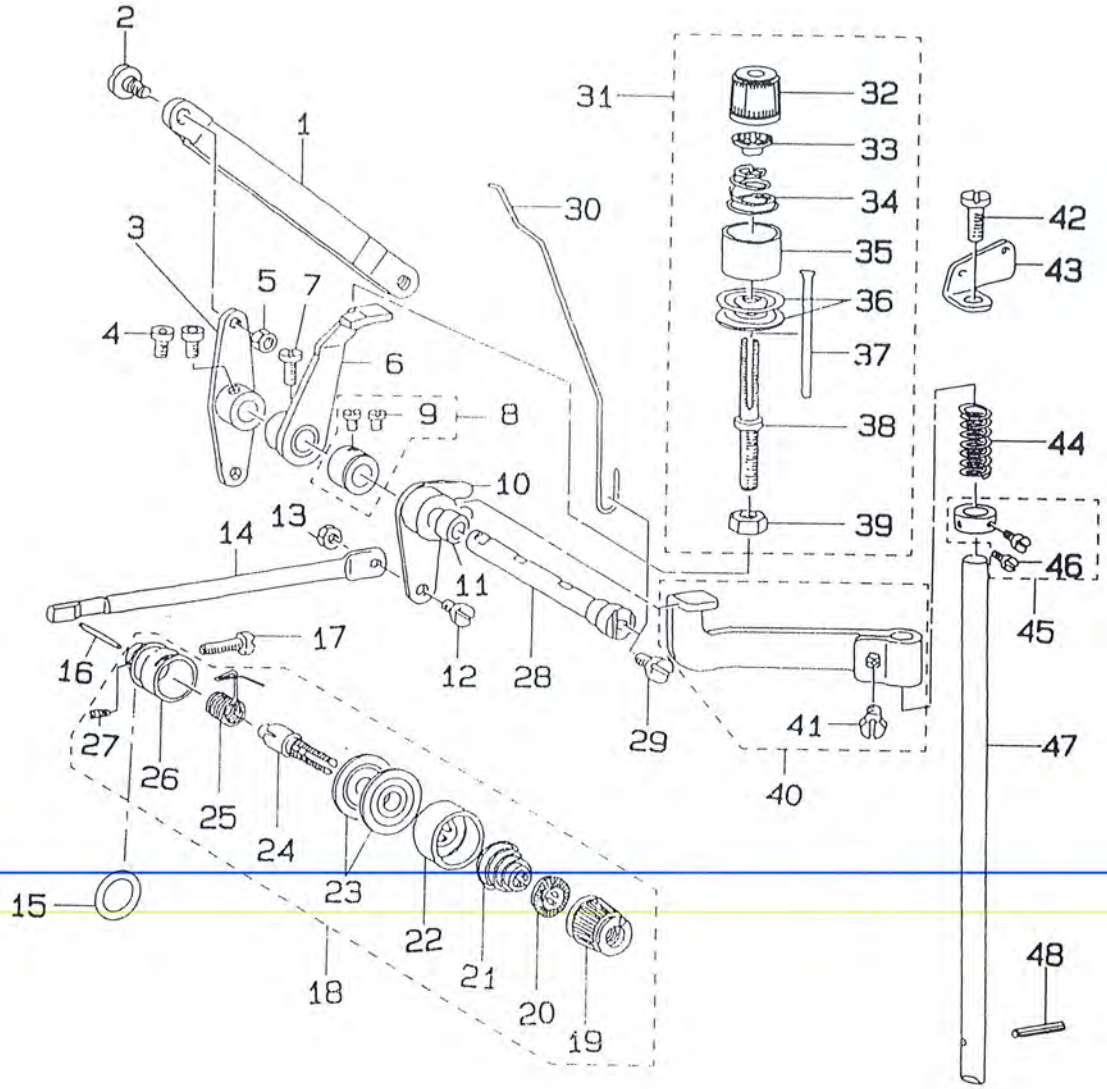

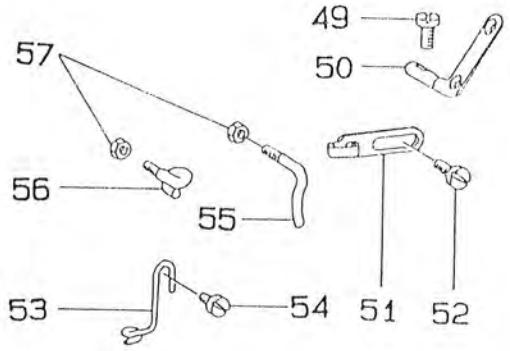

			Description	Qty
1	F81512		TENSION RELEASE LINK	1
2	D8.04-18		HINGE SCREW	1
3	F815160		TENSION RELEASE LEVER	1
4	FJ70		SCREW 1/4-40 L=7.0	2
5	FJ6170		NUT 3/16-28	1
6	F815100		TENSION RELEASE LEVER	1
7	FJ67		SCREW 3/16-32 L=9.5	1
8	F81518		THRUST COLLAR ASM.	1
9	FJ74		SCREW 11/64-40 L=4.5	(2)
10	F81511		TENSION RELEASE CRANK	1
11	F81519		TENSION RELEASE LEVER COLLAR	1
12	F81520		HINGE SCREW	1
13	FJ6170		NUT 9/64-40	1
14	F81503		TENSION RELEASE ROD	1
15	GB3452.1-82		RUBBER RING	1
16	F81526		TENSION RELEASE PIN.NO.2	1
17	F67		SCREW 11/64-40 L=16	1
18			TENSION CONTROLLER NO.2 ASM.	1
19	F81507		THREAD TENSION PICK-UP(RED)	(1)
20	F81508		TENSION SPRING BUSHING	(1)
21	F81524		TENSION SPRING .RED	(1)
22	Y01.06-1		THREAD TENSION DISK PRESSER	(1)
23	SJ15-368		THREAD TENSION DISK	(2)
24	F81523		TENSION POST NO.2	(1)
25	F81525		THREAD TAKE-UP SPRING	(1)
26	F81522		TENSION POST SOCKET	(1)
27	FJ74		SCREW 9/64-40 L=5.5	(1)
28	F81517		TENSION RELEASE LEVER SHAFT	1
29	FJ67		SCREW 11/64-40 L=7.8	1
30	F81504		THREAD PULLING WIRE	1
31			TENSION CONTROLLER NO.1 ASM.	1
32	F81507		THREAD TENSION PICK-UP(RED)	(1)
33	F81508		TENSION SPRING BUSHING	(1)
34	F81506		TENSION SPRING NO.1	(1)
35	Y01.06-1		THREAD TENSION DISK PRESSER	(1)
36	SJ15-368		THREAD TENSION DISK	(2)
37	F81505		TENSION RELEASE PIN NO.1	(1)
38	F81509		TENSION POST NO.1	(1)
39	FJ6170		NUT 1/4-24	(1)
40	F81513		TENSION RELEASE ARM ASM.	1
41	FJ29.1		SCREW 1/4-40 L=8.5	(1)
42	FJ67		SCREW 15/64-28 L=12	1
43	D8.05-22		THREAD GUIDE PLATE	1
44	F81527		SPRING	1
45	F81514		THRUST COLLAR ASM.	1
46	FJ67		SCREW 9/64-40 L=4.5	(2)
47	F81515		TENSION RELEASE ROD	1
48	GB879-86		SPRING PIN 3 × 18	1
49	FJ67		SCREW 11/64-40 L=7	1
50	F81521		THREAD EYELET	1
51	D8.05-24		ARM THREAD GUIDE	1
52	FJ67		SCREW 9/64-40 L=6.8	1
53	F81501		NEEDLE BAR THREAD GUIDE	1
54	FJ67		SCREW 11/64-40 L=7.8	1
55	F81[illegible]		TENSION THREAD GUIDE, NO.2	1
56	D8.05-1		THREAD GUIDE	1
57	FJ6170		NUT 9/64-40	2

17.

LUBRICATION MECHANISM COMPONENTS

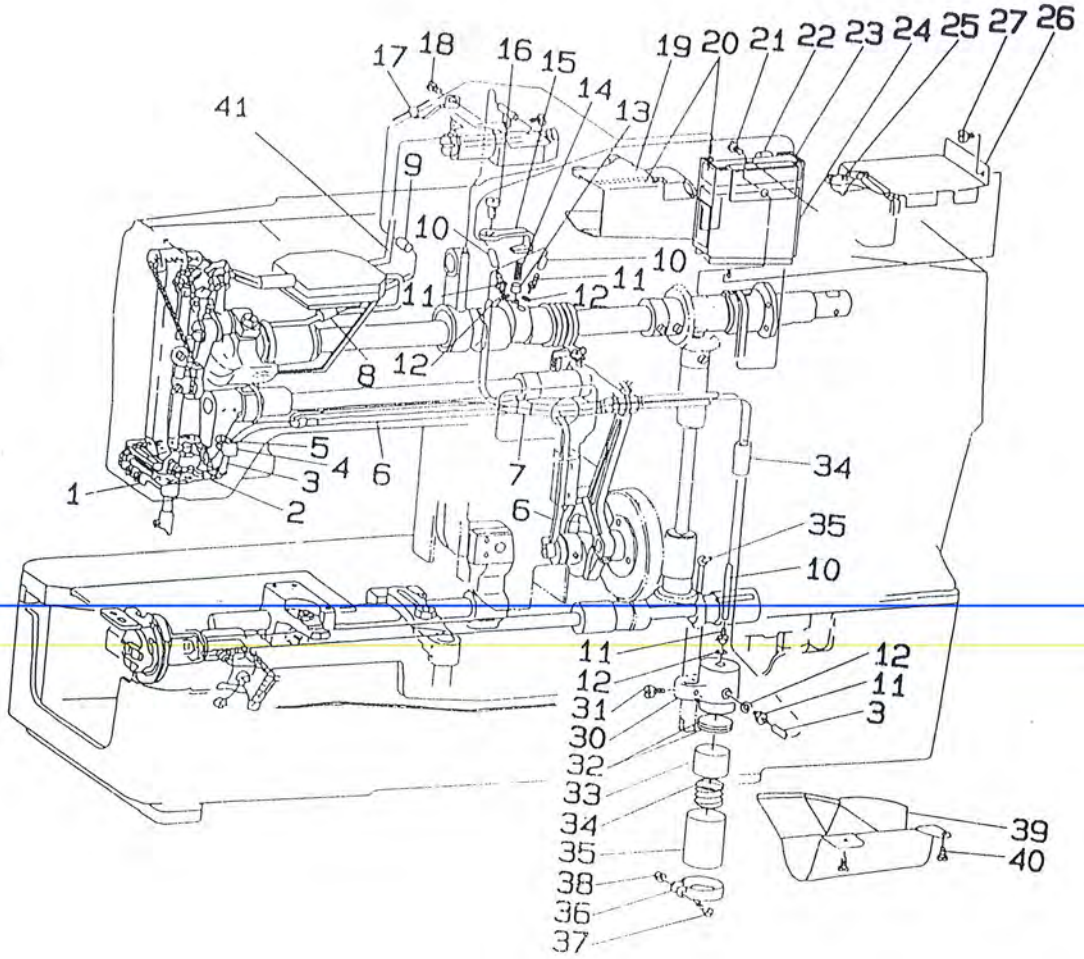

			Description	Qty
1	F81713		OIL FELT HOLDER	1
2	F81701		OIL RETURN FELT (A)	1
3	F81702		OIL RETURN TUBE	1
4	F81712		CABLE HOLDER	1
5	FJ65		SCREW 11/64-40 L=7	1
6	F81703		OIL WICK	1
7	F81723		PIPE GUIDE (A)	1
8	HG2-775		VINYL PIPE	1
9	HG2-775		VINYL PIPE	1
10	HG2-775		VINYL PIPE	1
11	F81714		CONNECTING SCREW	4
12	F81715		GASKET	4
13	SJ08.3-12		PLUNGER	1
14	SJ08.3-11		PLUNGER SPRING	1
15	F81706		THRUST PLATE	1
16	FJ65		SCREW 15/64-28 L=7	1
17	F81705		OIL FELT GUIDE	1
18	FJ65		SCREW 11/64-40 L=7	1
19	F81709		OIL FELT	1
20	F817170		OIL PAN ASM.	1
21	FJ65		SCREW 11/64-40 L=5	1
22	F81710		OIL UNWOVEN CLOTH	1
23	F81708		OIL FELT	1
24	F81711		OIL FELT	1
25	F81707		OIL WICK	1
26	F81716		OIL SHIELD	1
27	FJ65		SCREW 11/64-40 L=5	1
28	HG2-775		VINYL PIPE	3
29	FZ339-85		OIL WICK	1
30	F81721		OIL PUMP BASE	1
31	FJ65		SCREW	1
32	SJ08A.3-23		FILTER	2
33	F81718		OIL FELT	1
34	SJ08.3-24		SPRING	1
35	SJ08.3-22		FILTER SCREEN	1
36	F81720		BUSHING HOLDER	1
37	FJ65		SCREW 9/64-40 L=8.5	1
38	FJ6170		NUT 9/64-40	1
39	F81722		OIL SHIELD	1
40	FJ65		SCREW 11/64-40 L=5	2
41	F81704		OIL FELT	1

BOBBIN WINDER COMPONENTS

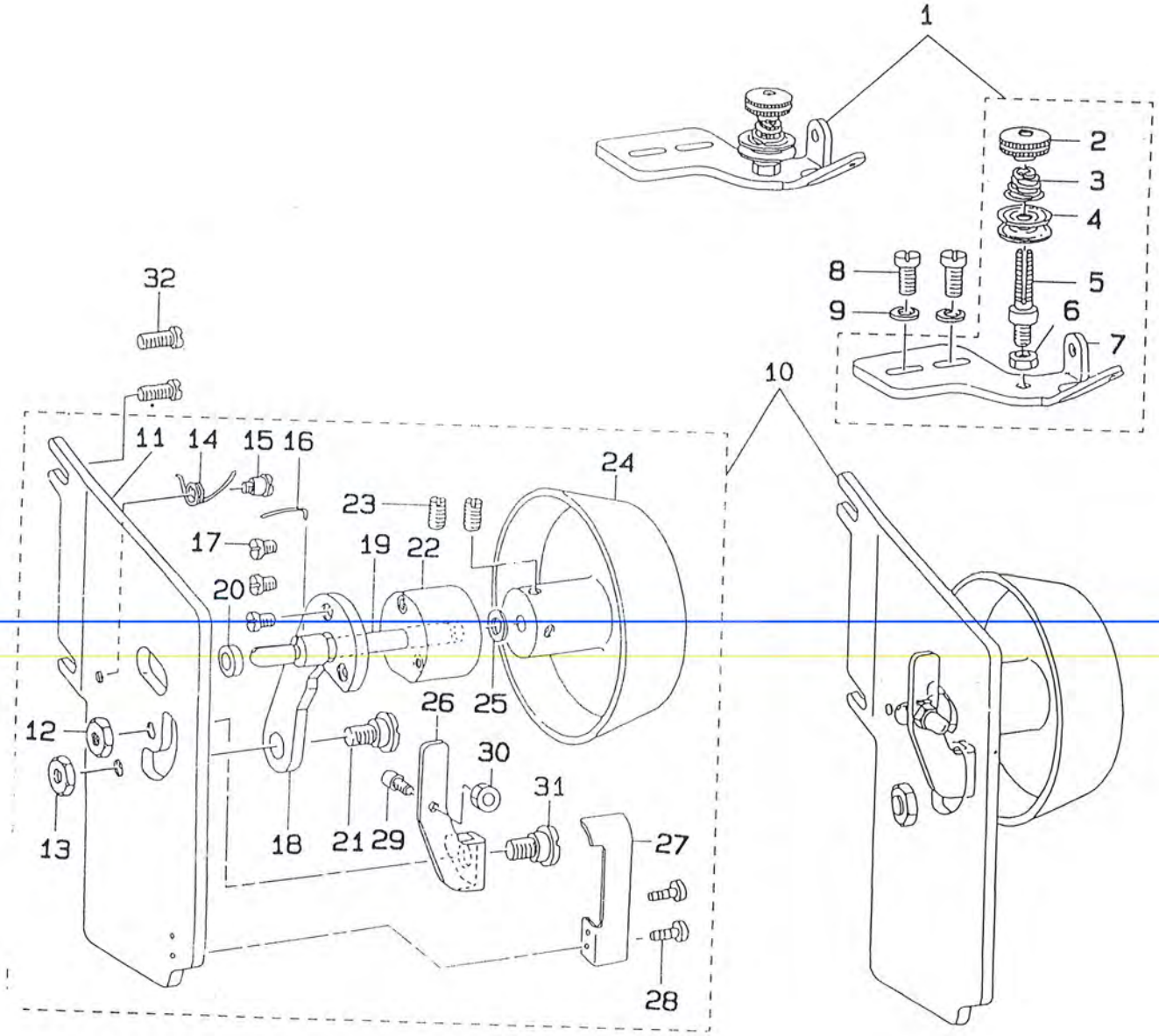

			Description	Qty
1			BOBBIN WINDER TENSION ASM.	1
2	D8.03-16		BOBBIN WINDER TENSION NUT	(1)
3	SJ08A.21-4		BOBBIN WINDER TENSION SPRING	(1)
4	SJ08A.21-5		BOBBIN WINDER TENSION DISC	(2)
5	D8.03-15		BOBBIN WINDER TENSION POST	(1)
6	FJ6170		NUT 11/64-40	(1)
7	F81801		BOBBIN WINDER TENSION BRACKET	(1)
8	FJ67		SCREW 11/64-40 L=7.8	2
9	F81804		WASHER	2
10			BOBBIN WINDER ASM.	1
11	F81806		BOBBIN WINDER BRACKET	(1)
12	FJ6170		NUT 11/64-40	(1)
13	FJ6170		NUT 15/64-28	(1)
14	SJ08A.18-4		BOBBIN WINDER SPRING	(1)
15	F81805		HINGE SCREW	(1)
16	SJ08A.18-13		BOBBIN STOP SPRING	(1)
17	FJ67		SCREW 9/64-40 L=6	(3)
18	SJ08A.18-2		PULLEY SHAFT BASE	(1)
19	F81812		BOBBIN WINDER SHAFT	(1)
20	F81811		COLLAR	(1)
21	F81808		HINGE SCREW	(1)
22	F81813		BOBBIN WINDER SHAFT BUSHING	(1)
23	FJ74		SCREW 3/16-28 L=7	(2)
24	F81814		BOBBIN WINDER DRIVING PULLEY	(1)
25	SJ08A.18-8		WASHER	(1)
26	FJ81810		BOBBIN WINDER TRIP LATCH	(1)
27	SJ08A.18-16		BOBBIN GUIDE SPRING	(1)
28	FJ67		SCREW 9/64-40 L=4.5	(2)
29	F81809		ADJUSTING SCREW	(1)
30	FJ6170		NUT 1/8-44	(1)
31	F81807		HINGE SCREW	(1)
32	FJ67		SCREW 11/64-40 L=7.8	2

19.

SPEED TRANSMITTER COMPONENTS

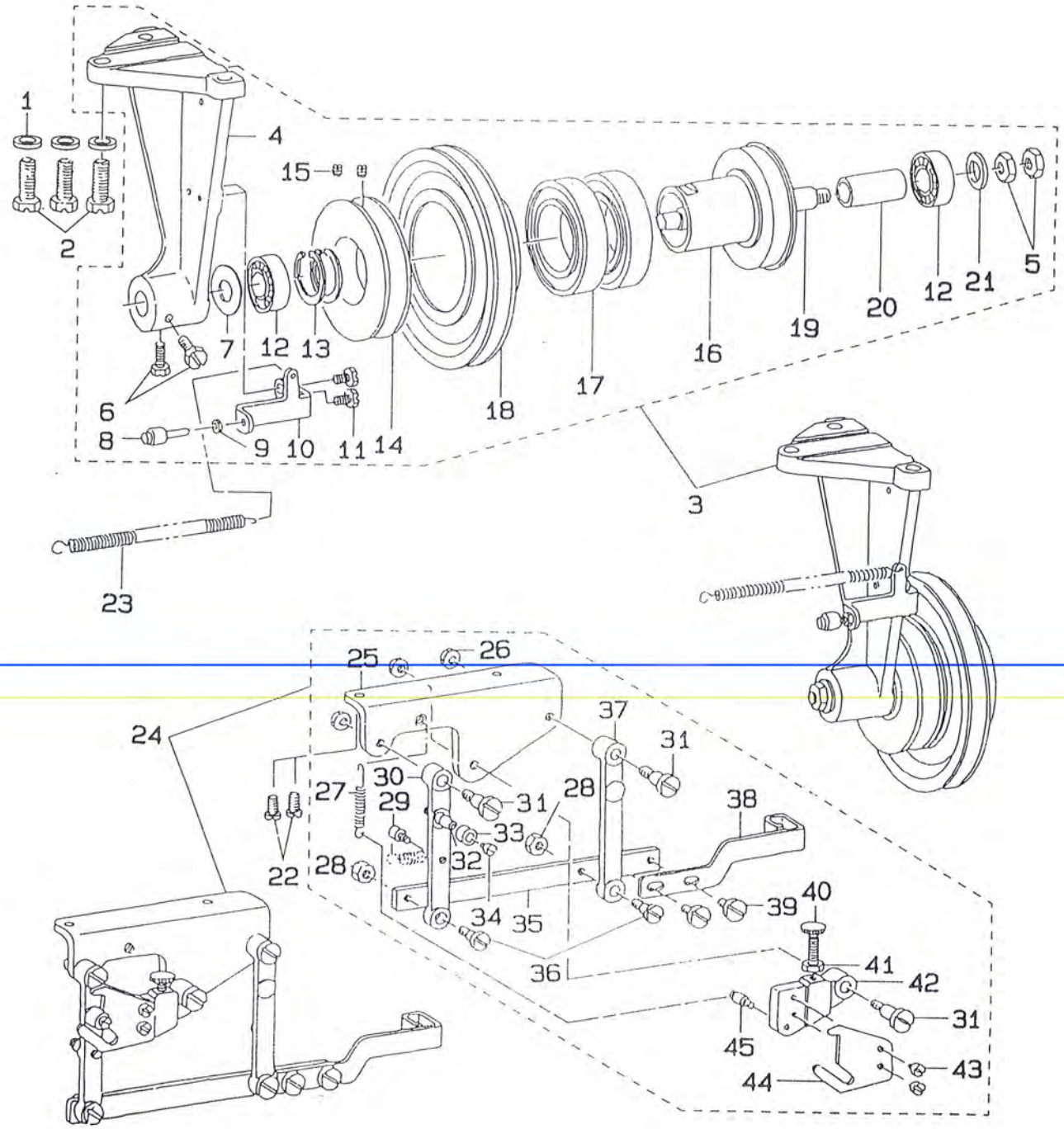

			Description	Qty
1	GB97.2		WASHER	3
2	FJ29.1		SCREW 15/64-28 L=20.5	3
3			SPEED TRANSMITTER ASM.	1
4	F81905		SPEED TRANSMITTER BRACKET	(1)
5	FJ6170		NUT 3/8-28	(2)
6	FJ29.1		SCREW 1/4-40 L=12	(2)
7	SJ08A.19-10		HIGH SPEED WASHER FOR BEARING	(1)
8	F802070		STOP SCREW ASM	(1)
9	FJ6170		NUT 15/64-28	(1)
10	F81918		SHIFTER STOPPER BRACKET	(1)
11	FJ29.1		SCREW 15/64-28 L=14	(2)
12	GB278		BEARING	(2)
13	GB893.1		RETAINING RING 35	(2)
14	F81914		ACCELERATING PULLEY	(1)
15	FJ74		SCREW 15/64-28 L 7	(2)
16	F81916		HIGH-SPEED PULLEY	(1)
17	GB278		BEARING	(2)
18	SJ08A.19-4		LOW-SPEED PULLEY	(1)
19	F81915		SPEED TRANSMITTER SHAFT	(1)
20	SJ08A.19-9		SLEEVE	(1)
21	GB848		WASHER	(1)
22	FJ67		SCREW 15/64-28 L=12	2
23	SJ08A.19-2		SHIFTER TENSION SPRING	1
24			SHIFTER BASE ASM.	1
25	F81904		SHIFTER BASE	(1)
26	FJ6170		NUT 15/64-28	(3)
27	SJ08A.19-19		SHIFTER CAM SPRING	(1)
28	FJ6170		NUT 1/4-24	(2)
29	F81902		SPRING RACK	(1)
30	F81903		SHIFTER DRIVING ARM	(1)
31	F81911		SHIFTER DRIVING ARM SCREW	(3)
32	F81909		ROLLER STUD	(1)
33	F80827		CAM ROLL	(1)
34	F80826		SCREW	(1)
35	F81908		SHIFTER INSTALLING PLATE	(1)
36	D8.10-5		HINGE SCREW	(2)
37	F81912		SHIFTER HOLDING ARM	(1)
38	SJ08A.19-11		SPEED TRANSMITTER SHIFTER	(!)
39	F81913		SCREW	(2)
40	F81906		SHIFTER PIN	(1)
41	FJ6170		NUT 15/64-28	(1)
42	F81907		SHIFTER CAM MOUNTING	(1)
43	FJ67		SCREW	(2)
44	SJ08A.19-17		SHIFTER CAM	(1)
45	F81910		SUSPENSION PIN	(1)

TENSION PULLEY COMPONENTS

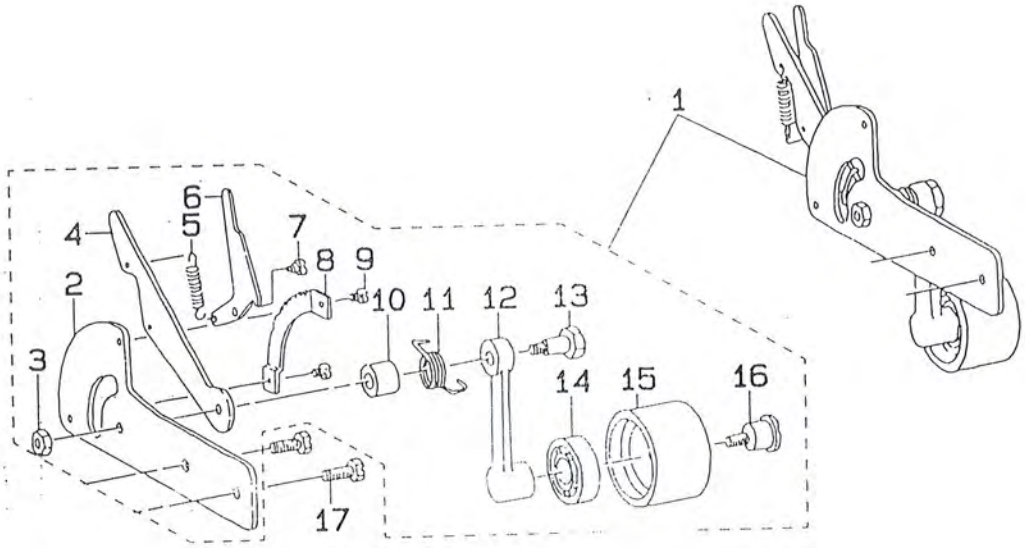

			Description	Qty
1			TENSION PULLEY ASM.	1
2	F82004		TENSION PULLEY BRACKET	(1)
3	FJ6170		NUT 15/64-28	(1)
4	F82002		TENSION LEVER	(1)
5	SJ08A.20-3		NIPPER BAR ACTUATIING LEVER SPR.	(1)
6	SJ08A.20-1		FIXING PAWL	(1)
7	F82007		HINGE SCREW	(1)
8	F82003		RATCHET	(1)
9	FJ67		SCREW 11/64-40 L=7	(2)
10	SJ08A.20-12		LEVER COLLAR	(1)
11	SJ08A.20-10		TENSION SPRING	(1)
12	F82005		TENSION PULLEY LINK	(1)
13	F82001		HINGE SCREW	(1)
14	GB278		BEARING	(1)
15	SJ08A.20-8		TENSION PULLEY	(1)
16	F82006		HINGE SCREW	(1)
17	F29.1		SCREW 15/64-28 L=14	2

21.

NEEDLE SAFETY PLATE COMPONENTS

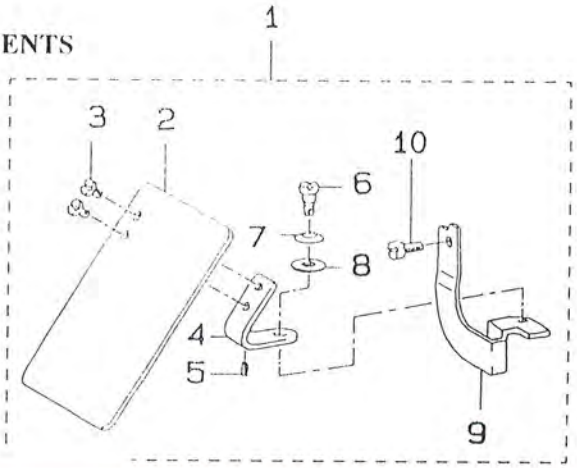

			Description	Qty
1			SAFETY PLATE ASM.	1
2	D8.19-1		SAFETY PLATE	(1)
3	FJ67		SCREW 11/64-40 L=7	(2)
4	F82102		SAFETY PLATE INSTALLING PLATE	(1)
5	GB879-86		STOPPER PIN	(1)
6	D8.19-5		HINGE SCREW D=6 H=4	(1)
7	D8.19-4		DISK SPRING	(1)
8	D8.19-3		WASHER 6.5 × 13 × 0.8	(1)
9	F82101		SAFETY PLATE ADJUSTING BASE	(1)
10	FJ67		SCREW 11/64-40 L=10.5	(1)

22.

MOTOR PULLEY COMPONENTS

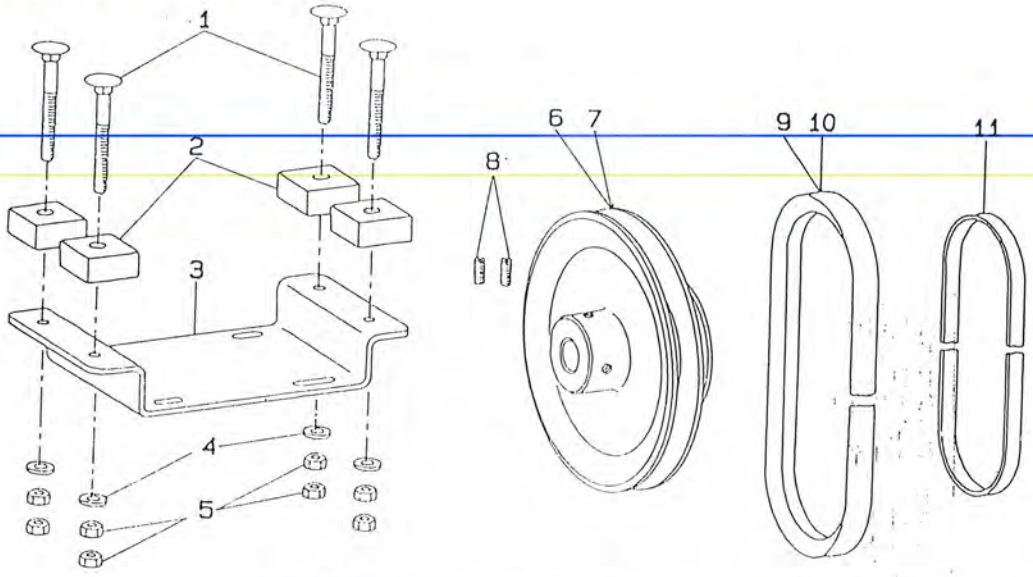

			Description	Qty
1	GB14		MOUNTING BOLT	4
2	SJ08A.1F-3		SPACER	4
3	SJ08A.1F-2		MOTOR BASE PLATE	1
4	GB97.2		WASHER	4
5	GB6170		NUT	8
6	F8J0020		MOTOR PULLEY (50HZ)	1
7	F8J0020A		MOTOR PULLEY (60HZ)	1
8	GB74		SCREW	2
9-10			V-BELT 42 INCH.44 INCH (50HZ)	各1
9-10			V-BELT 42 INCH (60HZ)	2
11	GT10 × 1100		BELT	1

23.
THREAD STAND COMPONENTS

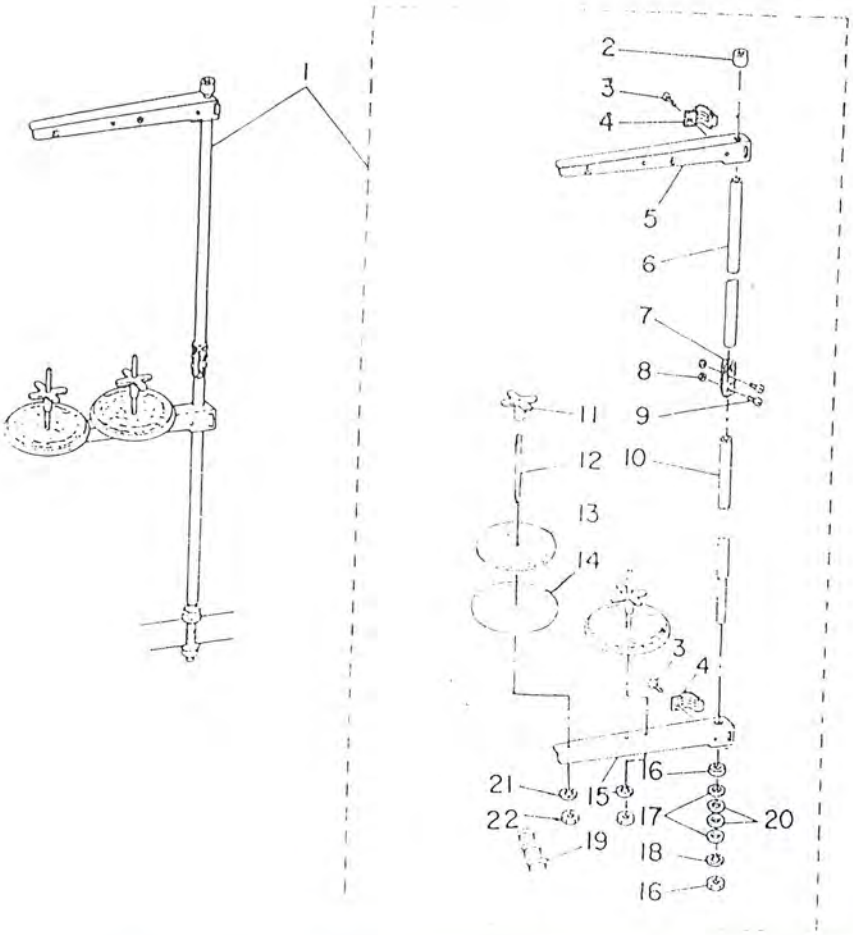

序号	图 号		Description	数量 Qty
1			THREAD STAND ASM	1
2	D8.20-1		SPOOL REST ROD RUBBER CAP	(1)
3	GB67		NUT M6 L=16	(2)
4	D8.20-3		THREAD GUIDE ARM JOINT	(2)
5	D8.20-4		THREAD GUIDE ASM.B	(1)
6	D8.20-2		SPOOL REST ROD UPPER	(1)
7	D8.20-6		SPOOL REST ROD JOINT	(1)
8	GB6170		NUT M5	(2)
9	GB67		SCREW M5 L=14	(2)
10	D8.20-7		SPOOL REST ROD LOWER	(1)
11	D8.20-12		SPOOL RETAINER	(2)
12	D8.20-13		SPOOL PIN	(2)
13	D8.20-8		SPOOL REST CUSHION	(2)
14	D8.20-11		SPOOL REST	(2)
15	D8.20-4		SPOOL REST ASM.B	(1)
16	D8.20-9		NUT	(2)
17	GB95		WASHER 16	(2)
18	GB859		SPRING WASHER 16	(1)
19			STAPLE	(3)
20	D8.20-10		RUBBER WASHER	(2)
21	GB859		SPRING WASHER	(2)
22	GB6170		NUT M5	(2)

28.
EXCHANGING PARTS

TABLE OF CHANGING GEARS

	Small gear		Large gear	
	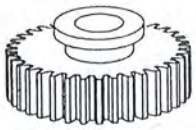		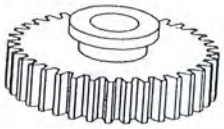	
set	Stitch No.	Part No.	Stitch No.	Part No.
A	54	F81128A	345	F81129A
B	62	F81128B	300	F81129B
C	66	F81128C	285	F81129C
D	70	F81128D	268	F81129D
E	74	F81128E	252	F81129E
F	79	F81128F	238	F81129F
G	83	F81128G	225	F81129G
H	88	F81128H	212	F81129H
I	93	F81128I	200	F81129I
J	100	F81128J	190	F81129J
K	105	F81128K	180	F81129K
L	110	F81128L	170	F81129L
M	115	F81128M	160	F81129M
N	123	F81128N	152	F81129N
O	130	F81128O	145	F81129O

TABLE SHOWING PARTS USED IN CONNECTION WITH KNIVES

	Knife		Work Clamp Check	Throat Plate
	A		B	C
	(mm)			
1	1/4"(6.35)	F81001F	F805080A F80508AK	F80907 F80907K
2	3/8"(9.53)	F81001K		
3	1/2"(12.7)	F81001L		
4	9/16"(14.29)	F81001V		
5	5/8"(15.88)	F81001M		
6	3/4"(19.05)	F81001N		
7	7/8"(22.23)	F81001P		
8	1"(25.4)	F81001Q	F805080B F80508BK	
9	1-1/4"(31.75)	F81001S	F805080C F80508CK	